List of contents

Bona Powerscrubber AM400201100 2
10 Bracket and switch 3
11 Bracket 4
12 Switch 6
9 Wiring harness plugged EU (AS3648231590) 8
20 Top Part 10
21 Tank 11
22 Single items 13
30 Lower Area Single Parts 16
31 Brushes Housing 17
32 Drive 20
40 Chassis 23
50 Accessories Pad roller 25
3 Hub for Pad roller BR VS (AS3651203130) 27
60 Accessories for Carpet Cleaning 29
1 ABS Carpet Cleaning BR 40/10 C (AS3627830140) 31

SPARE PARTS PAGE 1 of 19

ITEM	PART NUMBER	DESCRIPTION	Q.TY
1	AS3602014330	Retaining bracket and switch	1
2	AS3602014360	Top part	1
3	AS3602014400	Bottom part individual parts	1
4	AS3602014380	Chassis	1
5	AS3602012700	Accessories pad roll	1
6	AS3602013600	Accessories carpet cleaning	1

SPARE PARTS PAGE 2 of 19			
ITEM	***PART NUMBER***	***DESCRIPTION***	***Q.TY***
11	AS3602014340	Retaining bracket	1
12	AS3602014350	Switch	1

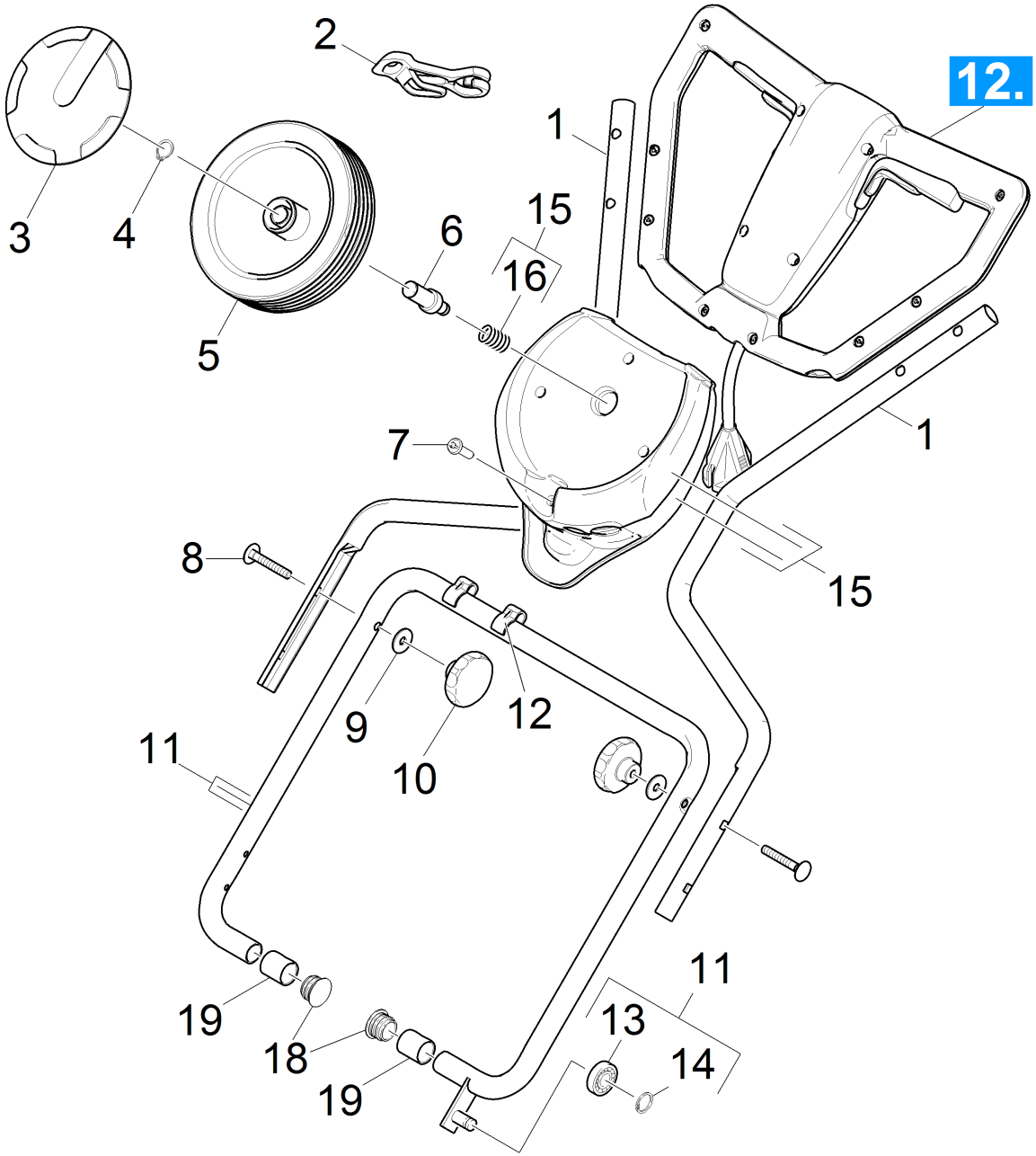
12.
1
2
3
4
5
6
7
8
9
10
11
12
13
14
15
16
18
19

SPARE PARTS PAGE 3 of 19			
ITEM	***PART NUMBER***	***DESCRIPTION***	***Q.TY***
1	AS3650347830	Retaining bracket top part	2
2	AS3666417760	Strain relief	1
3	AS3664353490	Wheel cap black neutrally	2
4	AS3673430050	Locking ring 16x1-FST-PHR DIN 471	2
5	AS3664351960	Wheel D 180	2
6	AS3650347950	Axle feed wheel	2
7	AS3673031080	Screw 5x20 -10.9-R2R (In6Rd)	4
8	AS3673030090	Saucer-head screw M8x50-8.8-A2E DIN 603	2
9	AS3673122770	Washer 8-200HV-A2E ISO7093-1	2
10	AS3663211770	Turning knob grey D55mm	2
11	AS3640342010	Retaining bracket bottom part replacemen	1
12	AS3650504260	Cable clip D22	2
13	AS3674011490	Ball bearing 608-2RS -Wälzl.St DIN 625	1
14	AS3673433000	Lock washer 7-A2 DIN 6799	1
15	AS3647830030	Set wheel vat	1
16	AS3653329810	Pressure spring	2
17	AS3627830130	ABS feed wheel BR 40/10C Classic	1
18	AS3663681730	Drain plug	2
19	AS3660340030	Socket Bearing	2

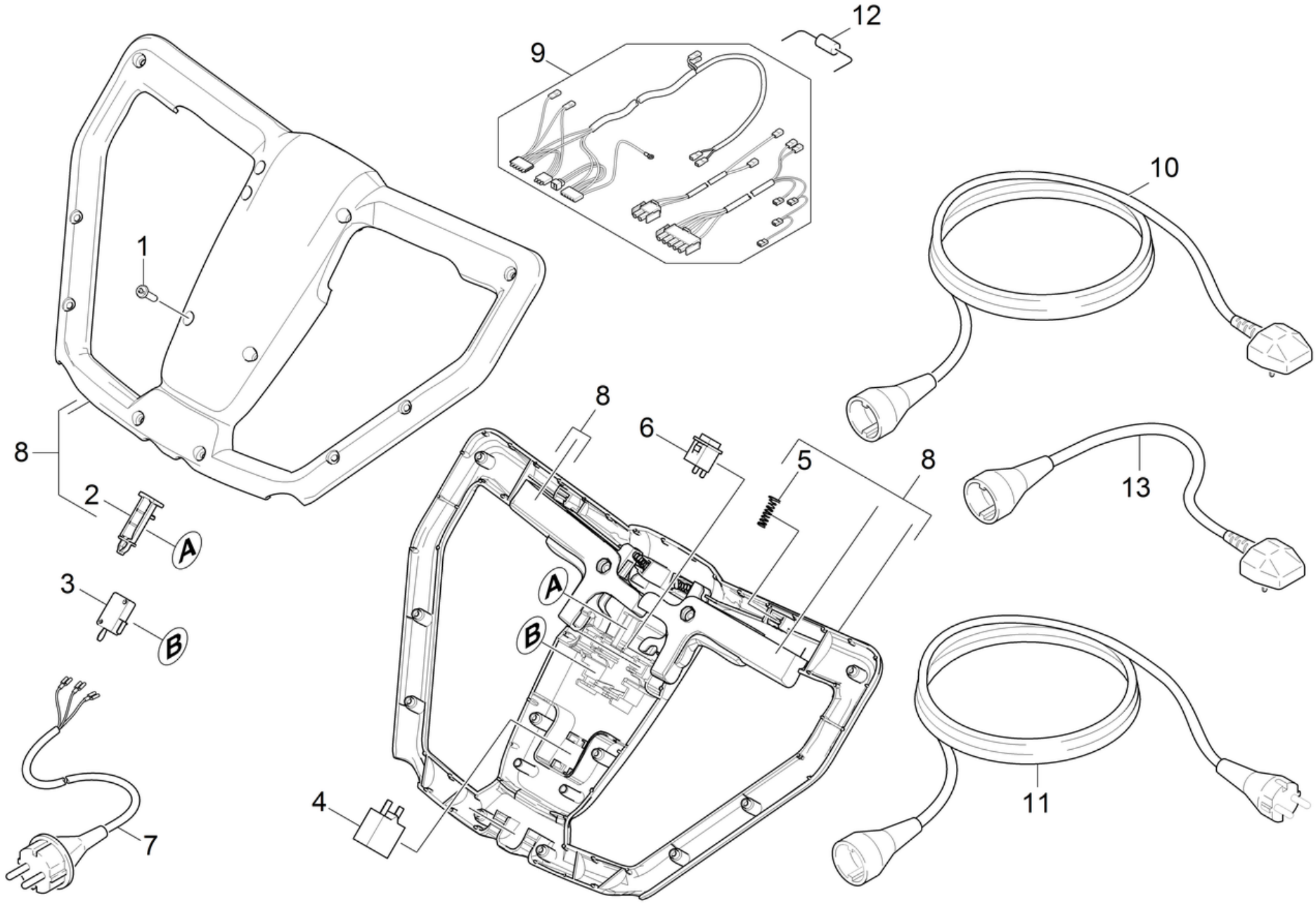
12
9
10
1
8
6
5
8
13
8
2
A
3
B
A
B
4
7
11

SPARE PARTS PAGE 4 of 19

ITEM	PART NUMBER	DESCRIPTION	Q.TY
1	AS3673031080	Screw 5x20 -10.9-R2R (In6Rd)	12
2	AS3650504330	Slide of a press switch	1
3	AS3666304260	Main switch	2
4	AS3666304280	Motor protecting switch 9A	1
5	AS3653329440	Spring conical	5
6	AS3666304270	Switch water pump	2
7	AS3666502040	Cable with plug	1
8	AS3647830160	Set operating unit replacement	1
9	AS3666502420	Cable harness BR 40/10 C	1
10	AS3666497000	Adapter cable UK	1
11	AS3666470220	Extension cable	1
12	AS3666640590	Diode Typ EM 513	1
13	AS3666502930	Adapter cable EU to GB, 20cm	1
14	AS3673031090	Screw 5x25 -10.9-R2R (In6Rd)	2
15	AS3650519490	Distance Holder for cablel	1

1
2

SPARE PARTS PAGE 5 of 19			
ITEM	***PART NUMBER***	***DESCRIPTION***	***Q.TY***
1	AS366458240	Connector RST16	1
2	AS3666458230	Socket RST16	1

SPARE PARTS PAGE 6 of 19			
ITEM	***PART NUMBER***	***DESCRIPTION***	***Q.TY***
21	AS3602014370	Tank	1
22	AS3602014390	Individual parts	1

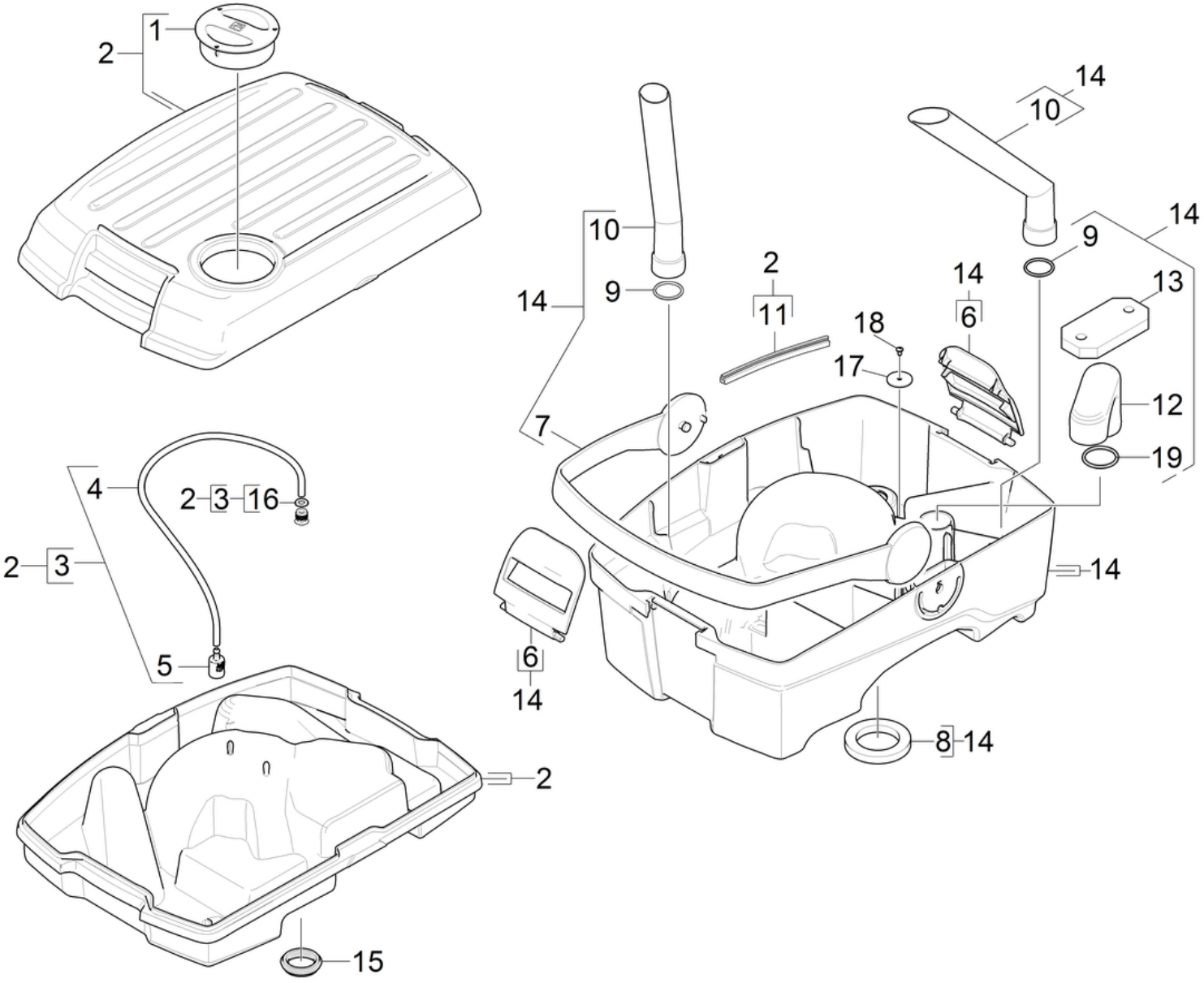
1
2
14
10
10
9
14
9
2
11
14
6
13
18
17
12
7
19
4
2
3
16
2
3
14
5
6
14
8
14
2
15

SPARE PARTS PAGE 7 of 19

ITEM	PART NUMBER	DESCRIPTION	Q.TY
1	AS3650507320	Cover metering fresh water (grey)	1
2	AS3647830060	Tank replacement	1
3	AS3640337530	Valve tank completely	1
4	AS3663882160	Hose DN 5	1
5	AS3657316640	Filter with weight	1
6	AS3650512630	Closure tank	2
7	AS3650503140	Carrier handle tank	2
8	AS3650348680	Joint ring	1
9	AS3663621080	O-Ring seal 30,0 X 3,0	2
10	AS3650504570	Suction tube waste water tank	2
11	AS3662732820	Profile gasket 8,4x7	1
12	AS3650504010	Elbow float	1
13	AS3655850600	Float BR 40/10	1
14	AS3640342500	Tank waste water blue Bona Sweden	1
15	AS3650505410	Form seal valve	1
16	AS3673120140	Washer 10-A4 ISO 7090	1
17	AS3650999330	Washer	1
18	AS3673032430	Screw 4x8 -A2-70 (K-IN6RD)	1
19	AS3663631170	O-Ring 41,0 x 2,5	1
20	AS3650519600	Sticker for Tank positioning	1

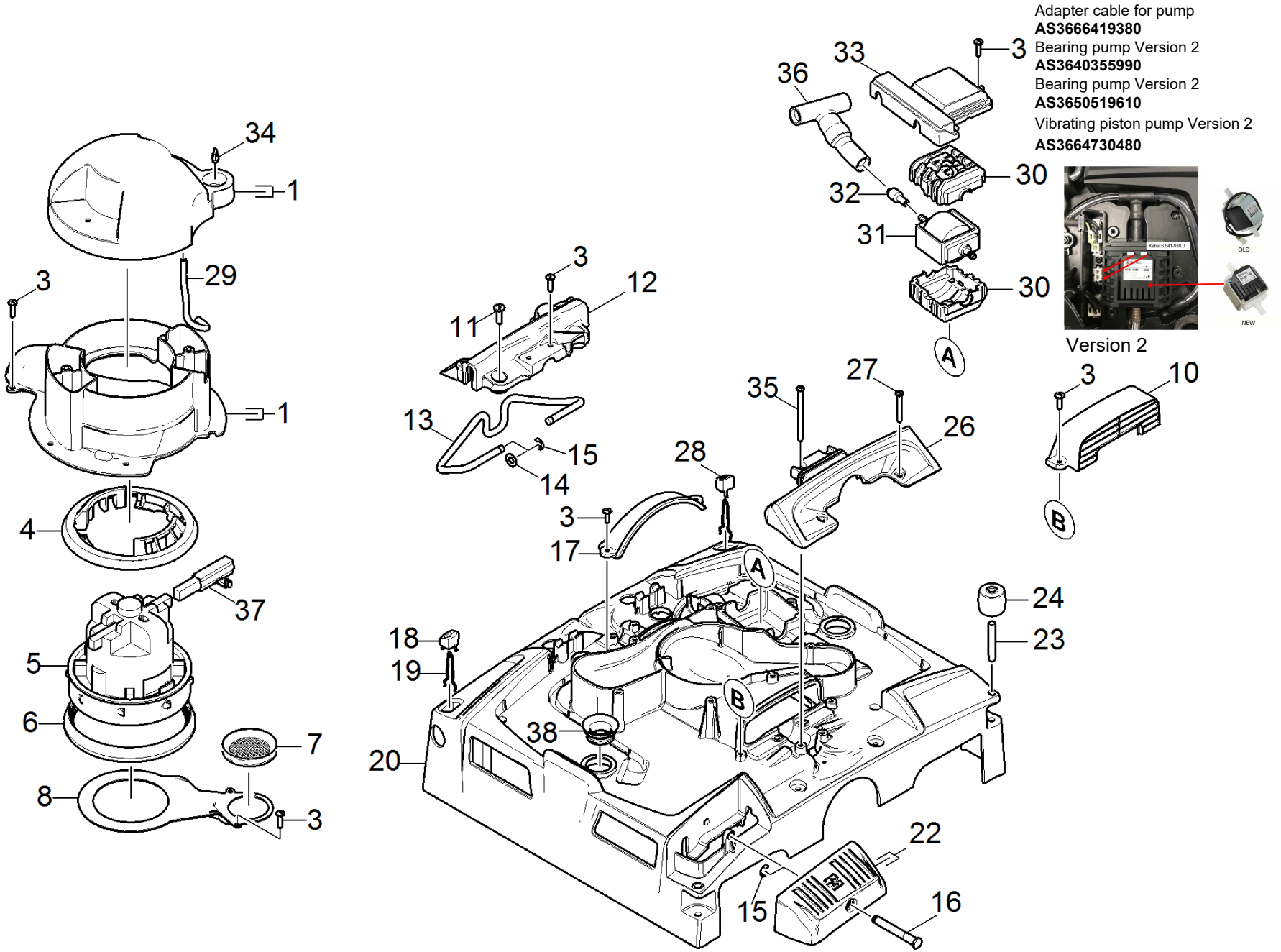
Adapter cable for pump
AS3666419380
Bearing pump Version 2
AS3640355990
Bearing pump Version 2
AS3650519610
Vibrating piston pump Version 2
AS3664730480
Version 2
OLD
NEW
34
1
29
3
1
4
37
5
6
7
8
3
11
12
13
15
14
3
17
28
35
27
26
36
33
3
30
32
31
30
A
3
10
B
24
23
18
19
20
38
A
B
22
15
16

SPARE PARTS PAGE 8 of 19			
ITEM	***PART NUMBER***	***DESCRIPTION***	***Q.TY***
1	AS3640333270	Set Housing Valve	1
3	AS3673031080	Screw 5x20 -10.9-R2R (In6Rd)	18
4	AS3650503620	Seal above vac motor	1
5	AS3666811330	Set turbine replacement BR 40/10 230V	1
6	AS3650503630	Seal bottom vac motor	1
7	AS3653633440	Joint ring	1
8	AS3650504490	Covering cap vacuum channel	1
9	AS3673031070	Screw 5x16 -10.9-P2R (K-In6Rd)	4
10	AS3650504070	Splash guard right	1
11	AS3673030670	Screw M8x16-ST-A3R (IN6RD)	4
12	AS3650504130	Retaining bracket fixing left	1
13	AS3650348270	Retaining bracket adjustment	1
14	AS3673120170	Washer 8-A2 ISO 7089	2
15	AS3673433000	Lock washer 7-A2 DIN 6799	3
16	AS3650347860	Bolt pedal	1
17	AS3650504060	Splash guard left	1
18	AS3650507280	Pusher rear grey	1
19	AS3650348390	Spring feed wheel	2
20	AS3650503080	Cover brush housing	1
22	AS3647830080	Set pedal replacement	1
23	AS3650348470	Bolt deflector roll	2
24	AS3650504050	Deflector roll	2
25	AS3660340030	Bush plain bearing	2
26	AS3650504140	Retaining bracket fixing right	1
27	AS3673031110	Screw 5x50 -10.9-R2R (K-In6Rd)	4
28	AS3650507260	Pusher front feed wheel grau	1
29	AS3663882160	Hose DN 5	1
30	AS3650504080	Bearing pump	2
31	AS3664730480	Motor pump	1
32	AS3650348760	Screen	1
33	AS3650504100	Cover pump	1
34	AS3651081920	Pin valve	1
35	AS3673031710	Screw 5x80 -10.9-R2R (K-In6Rd)	2
36	AS3640509560	Check valve	1

SPARE PARTS PAGE 9 of 19			
ITEM	***PART NUMBER***	***DESCRIPTION***	***Q.TY***
37	AS3666102700	Coal Brushes	2
38	AS3650504150	Sealing ring	2

SPARE PARTS PAGE 10 of 19			
ITEM	***PART NUMBER***	***DESCRIPTION***	***Q.TY***
31	AS3602014410	Brush housing	1
32	AS3602014420	Transmission	1

31 Brush housing (0.201-441.0)

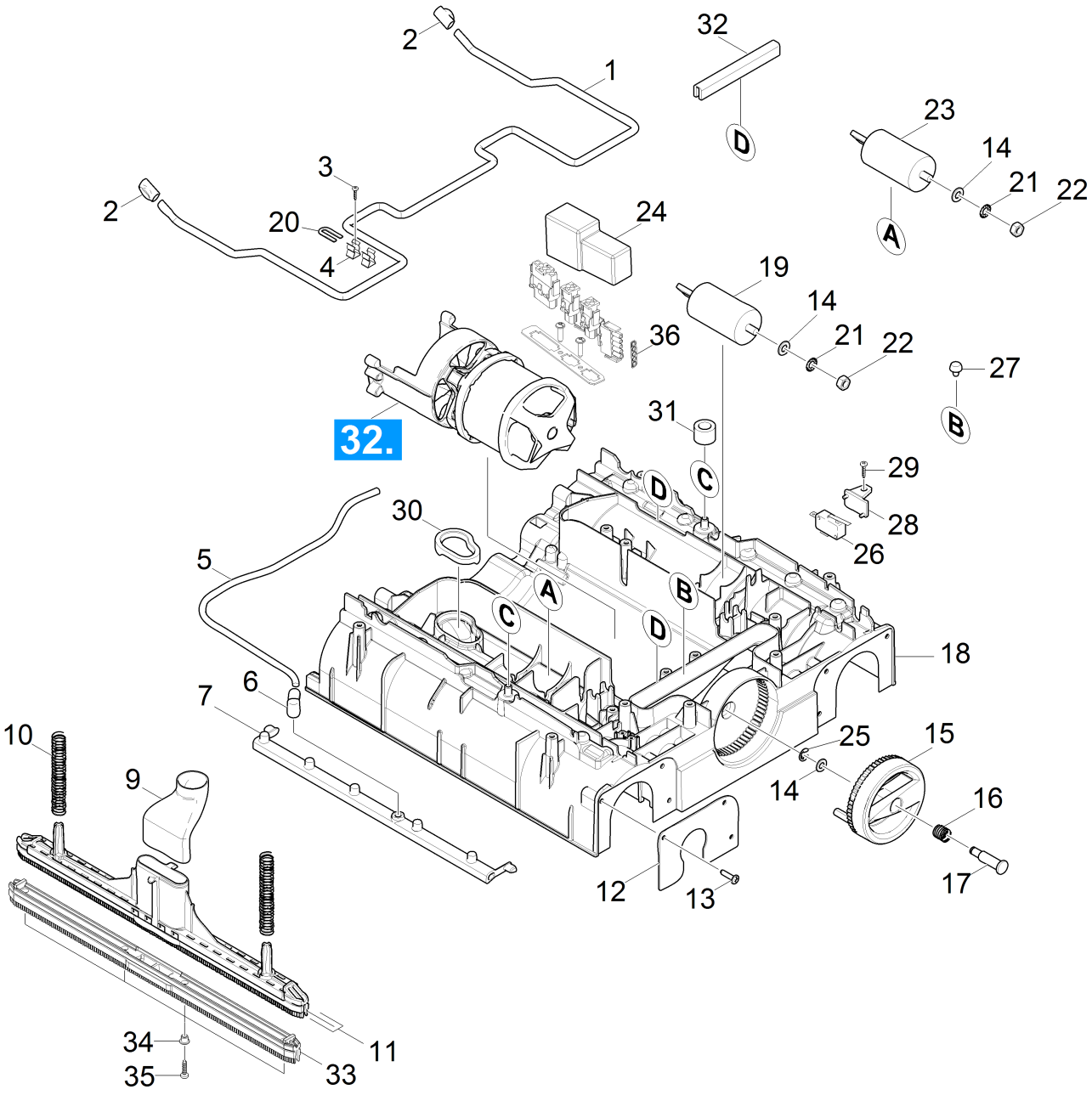

SPARE PARTS PAGE 11 of 19

ITEM	PART NUMBER	DESCRIPTION	Q.TY
1	AS3650347840	Retaining bracket suction bar	1
2	AS3650507290	Pusher suction bar grey	2
3	AS3673030920	Screw 3x12 -10.9-R2R (K-In6Rd)	2
4	AS3663304100	Spring clip X130-8L	2
5	AS3663882160	Hose DN 5	1
6	AS3650504110	Angle bushing water distributor	2
7	AS3650504090	Water distributor	2
8	AS3650504150	Joint ring suction bar	2
9	AS3650504040	Joining piece suction bar	2
10	AS3653322160	Helical spring	4
11	AS3647773220	Suction bar oil resistant complete	2
11	AS3647773230	Suction bar complete replacement	2
12	AS3650347990	Plate brush holder	2
13	AS3673032120	Screw 5x20 -A2-70 (In6Rd)	6
14	AS3673120040	Washer 8 -200HV-A3E ISO 7090	3
15	AS3650507480	Handle grey	1
16	AS3653322070	Helical spring	1
17	AS3650349290	Bolt carriage	1
18	AS3650503070	Brush housing	1
19	AS3666612130	Capacitor 95 MF	1
20	AS3650348730	Plate reinforcement	1
21	AS3673122330	Serrated lock washer A8,4-FSt-A3E DIN67	2
22	AS3673110040	Hexagon nut M8 -8-A3E ISO 4032	2
23	AS3666612120	Capacitor	1
24	AS3666829050	Starting electronic MAS (d) 230V	1
25	AS3673433000	Lock washer 7-A2 DIN 6799	1
26	AS3666304380	Micro switch	1
27	AS3663392490	Rubber buffer motor	2
28	AS3650506540	Retainer micro switch	1
29	AS3673031080	Screw 5x20 -10.9-R2R (In6Rd)	1
30	AS3650505720	Seal exhaust air	1
31	AS3650348940	Joint ring	2
32	AS3662730550	Profile gasket	1
33	AS3662733020	Suction bar Set 10x	1

SPARE PARTS PAGE 12 of 19			
ITEM	***PART NUMBER***	***DESCRIPTION***	***Q.TY***
33	AS3640352880	Suction bar oil-resistant Set 10x BR 40/10	1
34	AS3650348780	Socket for Suction bar	4
35	AS3666304260	Screw 5x20 -A2-70 (In6Rd)	4
36	AS3666304280	Washer Plug 5-pin	1

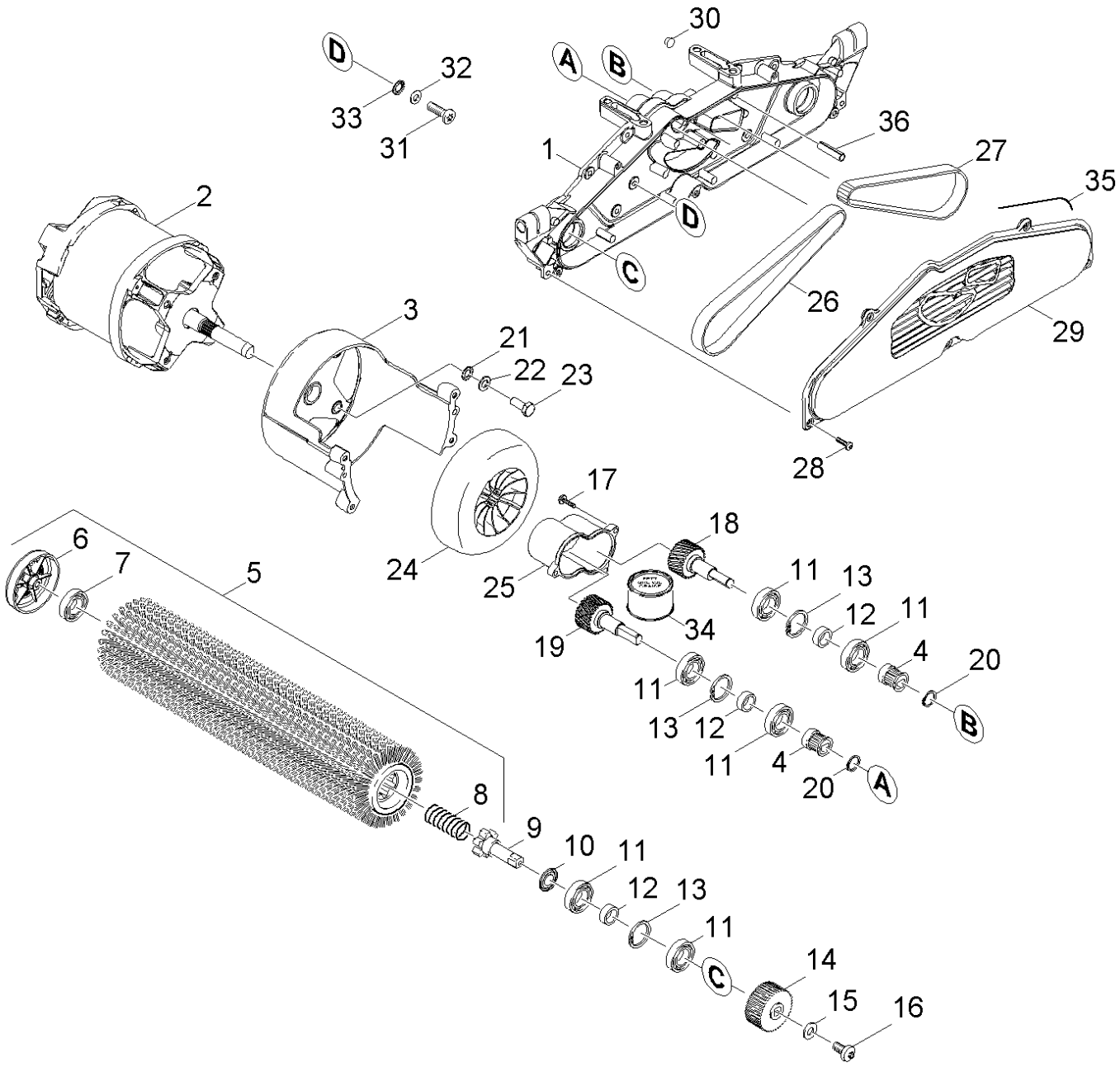
30
D
32
A
B
33
36
31
1
27
35
2
D
C
26
3
29
21
22
23
28
17
18
6
7
5
24
25
11
13
12
11
34
19
4
20
11
B
13
12
11
4
20
A
8
9
10
11
12
13
11
C
14
15
16

SPARE PARTS PAGE 13 of 19			
ITEM	***PART NUMBER***	***DESCRIPTION***	***Q.TY***
1	AS3650504450	Gear case worked	1
2	AS3666102910	Electric motor 2,1kW 230V	1
3	AS3650504320	Flange motor worked	1
4	AS3656253180	Belt pulley 21Z	2
5	AS3647622740	Roller brush horsehair nature BR VS 400	2
5	AS36547622520	Roller brush green (old colour grey)	2
5	AS3647624810	Roller brush black complete	2
5	AS3647620030	Roller brush red complete	2
5	AS3650504040	Joining piece suction bar	2
5	AS3647622500	Roller brush white (old colour black)	2
6	AS3640386770	Sheet metal component thread deflector	2
7	AS3664013630	Ball bearing	2
8	AS3653321140	Helical spring	2
9	AS3651005710	Driveshaft 59mm	2
10	AS3663632920	Joint ring NILOS 6002	2
11	AS3674011150	Ball bearing 6002-2RS -WAELZLAGST DIN 62	8
12	AS3651106860	Spacer sleeve	4
13	AS3673432310	Locking ring 32x1,2 -St-ph DIN 472	4
14	AS3656253570	Belt pulley 56Z HTD 3M	2
15	AS3673122920	Washer 6-A2 ISO 7093-1	2
16	AS3673061920	Screw M 6x 12-A2-70 (In6Rd)	2
17	AS3673030390	Screw M5x16 -St-A2R (In6Rd)	3
18	AS3641001250	Shaft gear left BR VS	1
19	AS3641002340	Shaft gear right	1
20	AS3673430030	Locking ring 12x1-Rf-St DIN 471	2
21	AS3673122330	Serrated lock washer A8,4-FSt-A3E DIN67	4
22	AS3673120170	Washer 8-A2 ISO 7089	4
23	AS3673043970	Hexagonal head screw M8x20-8.8-A2E ISO	4
24	AS3650503580	Blower wheel	1
25	AS3650503570	Cover gear	1
26	AS3663484440	Toothed belt HTD-420-3M-15 CXPIII	1
27	AS3663484310	Toothed belt HTD-474-3M-15 CXPIII	1
28	AS3673031080	Screw 5x20 -10.9-R2R (In6Rd)	1
29	AS3650503100	Cover gear case	1

SPARE PARTS PAGE 14 of 19			
ITEM	***PART NUMBER***	***DESCRIPTION***	***Q.TY***
30	AS3663683470	Cap D5	1
31	AS3673061050	Screw M6x30 -8.8-R3R (In6Rd)	4
32	AS3673120030	Washer 6 -200HV-A3E ISO 7090	1
33	AS3673122320	Serrated lock washer A6,4-FSt-A3E DIN 6	4
34	AS3662880950	Viscous oil	1
35	AS3662730370	Seal string cellular rubber 3	1
36	AS3673149440	Spring pin 5x24-St ISO 8752	2

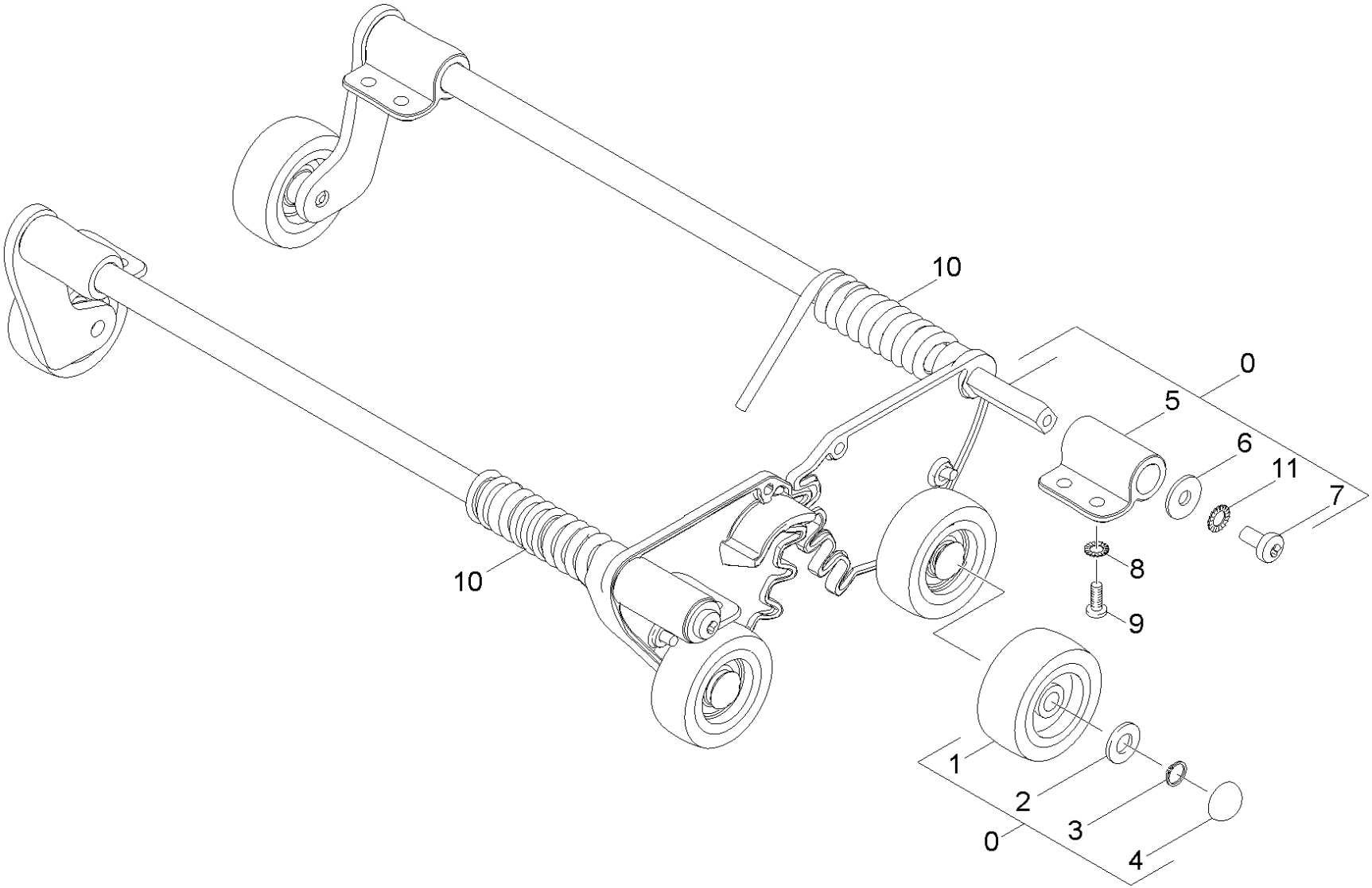
10
0
5
6
11
7
8
9
10
1
2
3
0
4

SPARE PARTS PAGE 15 of 19			
ITEM	***PART NUMBER***	***DESCRIPTION***	***Q.TY***
0	AS3630340080	Carriage complete	1
1	AS3664353730	Wheel traceless grey D50	4
2	AS3673620020	Joint ring A8x11,5 -Cu DIN 7603	4
3	AS3673431270	Locking ring 8x0,8 -Rf-St DIN 471	4
4	AS3663431320	Lock washer 8	4
5	AS3650503970	Bearing flange carriage	4
6	AS3673122920	Washer 6 -A2 ISO 7093-1	4
7	AS3673061920	Screw M 6x 12-A2-70 (In6Rd)	4
8	AS3673120410	Serrated lock washer A5,3-1.4310 DIN 67	8
9	AS3673032120	Screw 5x20 -A2-70 (In6Rd)	8
10	AS3640341790	Leg spring set	1
Position text: /AS3617833030			
10	AS3640341800	Leg spring set	1
Position text: /AS3617833000			
11	AS3673120200	Serrated lock washer A6,4-1.4310 DIN679	4

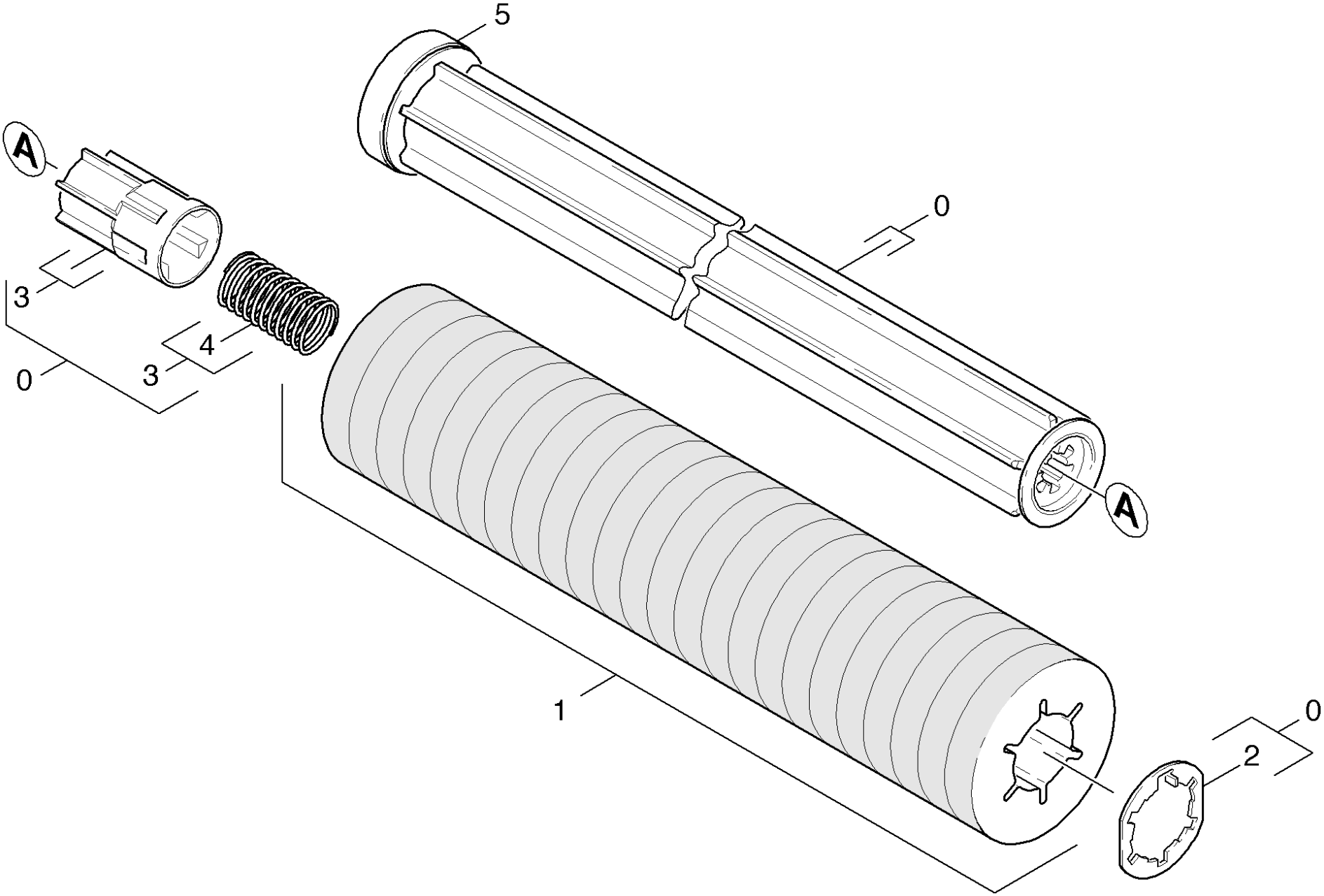
5
A
0
3
4
3
0
A
1
0
2

SPARE PARTS PAGE 16 of 19			
ITEM	***PART NUMBER***	***DESCRIPTION***	***Q.TY***
0	AS3647622280	Roll Pad BR VS 400	1
1	AS3686356910	Stripping roller 400mm	1
1	AS3663697260	Pad red with sleeve	1
1	AS3663697270	Pad white with sleeve BR VS 400	1
1	AS3641140040	Microfibre roll complete	1
1	AS3663697240	Pad yellow with sleeve	1
1	AS3663697250	Pad green with sleeve	1
2	AS3641150030	Washer closure	1
3	AS3651203130	Hub pad roll BR VS	1
4	AS3653324690	Helical spring	1
5	AS3640386770	Sheet metal component thread deflector	1

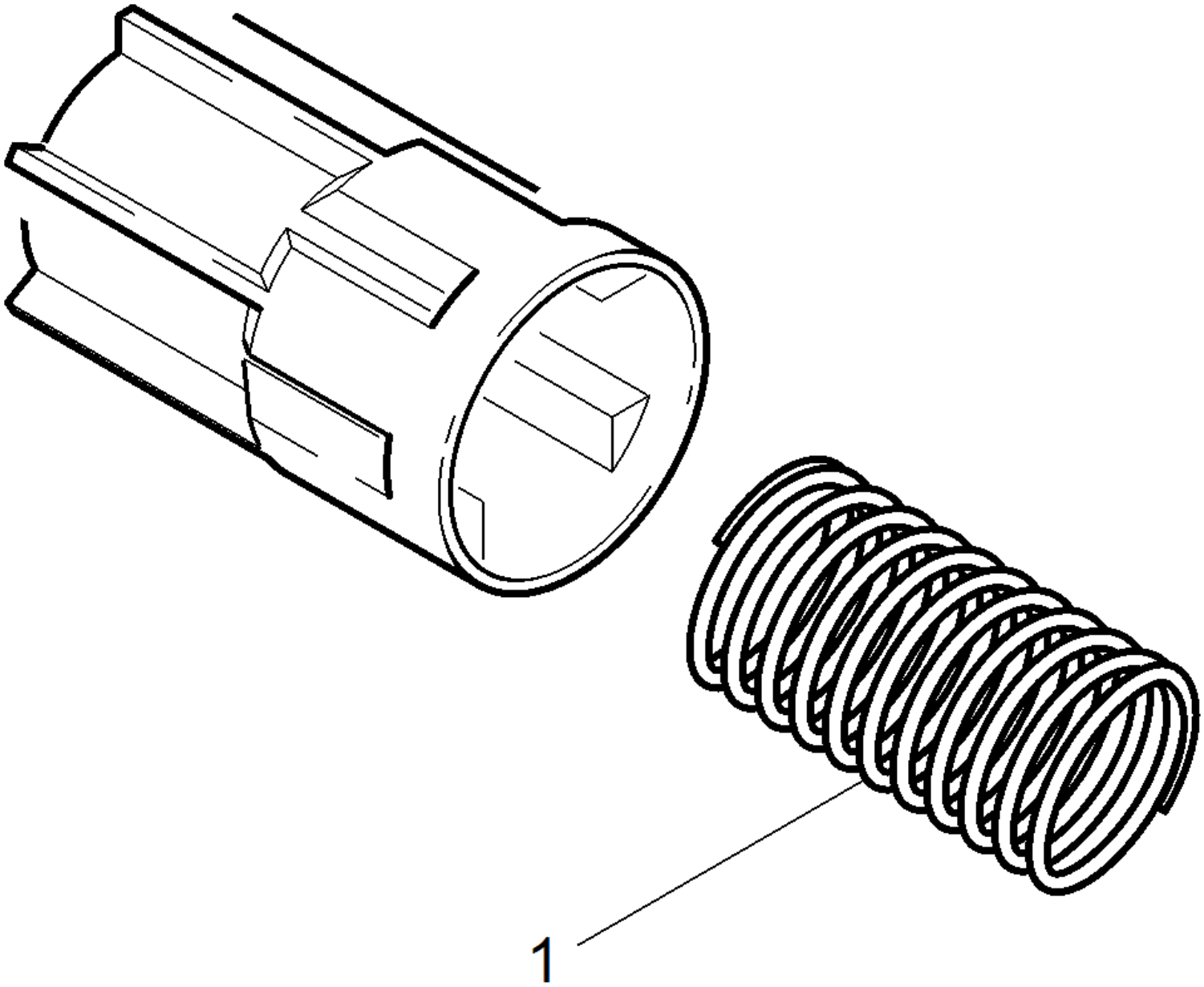
1

SPARE PARTS PAGE 17 of 19			
POS.	***PART NUMBER***	***DESCRIPTION***	***Q.TY***
1	AS3653324690	Coil spring	1

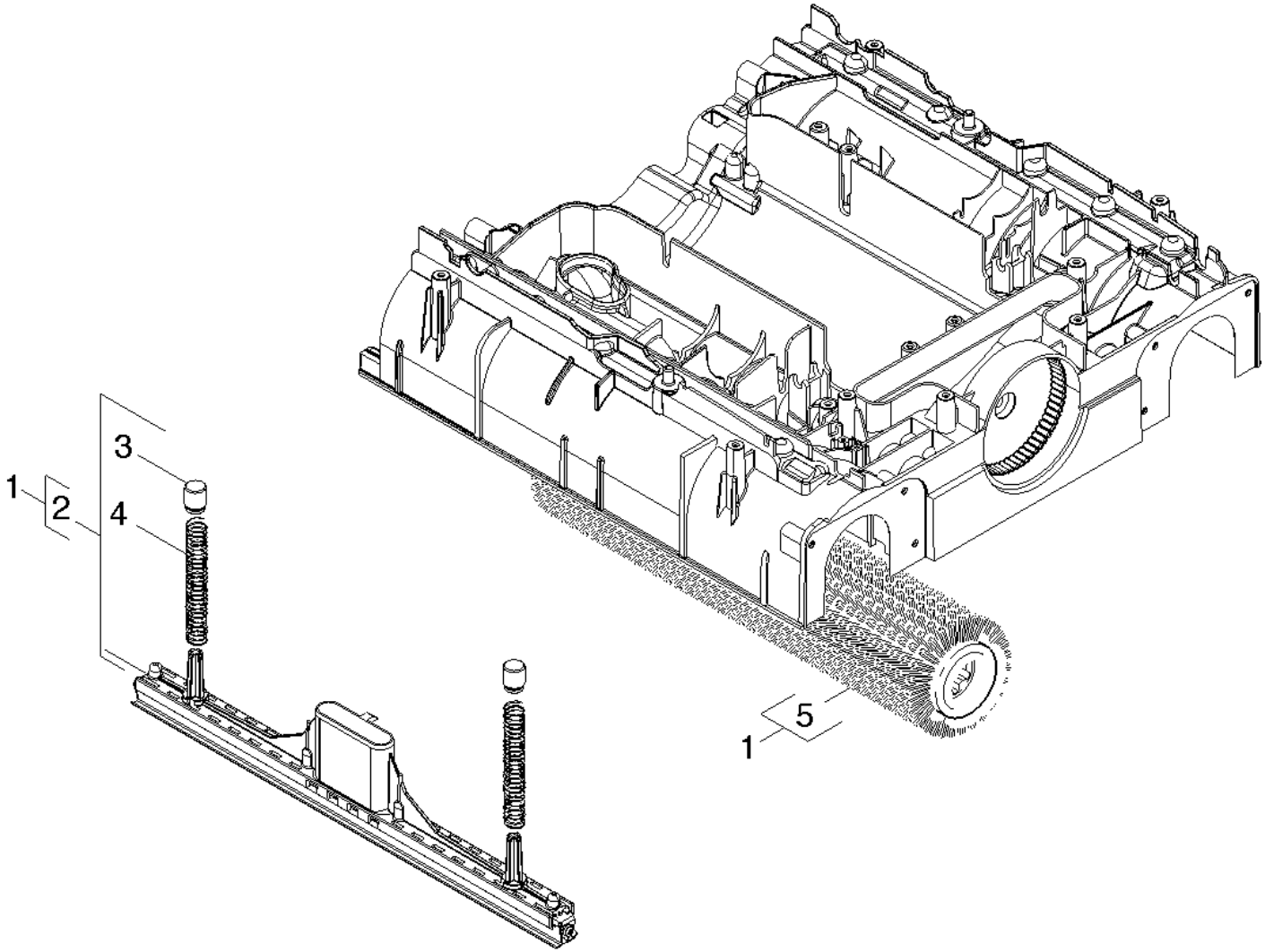
1
2
3
4
5
1

SPARE PARTS PAGE 18 of 19			
ITEM	***PART NUMBER***	***DESCRIPTION***	***Q.TY***
1	AS3627830140	ABS carpet cleaning BR 40/10 C	1
2	AS3647774170	Suction bar carpet cleaning	1
3	AS3650348970	Spacer spring suction bar	2
4	AS3653322160	Helical spring	2
5	AS3647622540	Roller brush complete light blue	1

SPARE PARTS PAGE 19 of 19

ITEM	PART NUMBER	DESCRIPTIONG	Q.TY
1	AS3647622540	Roller brush complete light blue	2
2	AS3662954900	RM 769** 0,5L Universal stain remover	1
3	AS3662902240	Carpet Cleaner RM 764 Classic, 1L	1
4	AS3647774170	Suction bar for carpet cleaning	2