Örebro Cutter GH 10 Previous Models AMO160000.0 Cutter drum

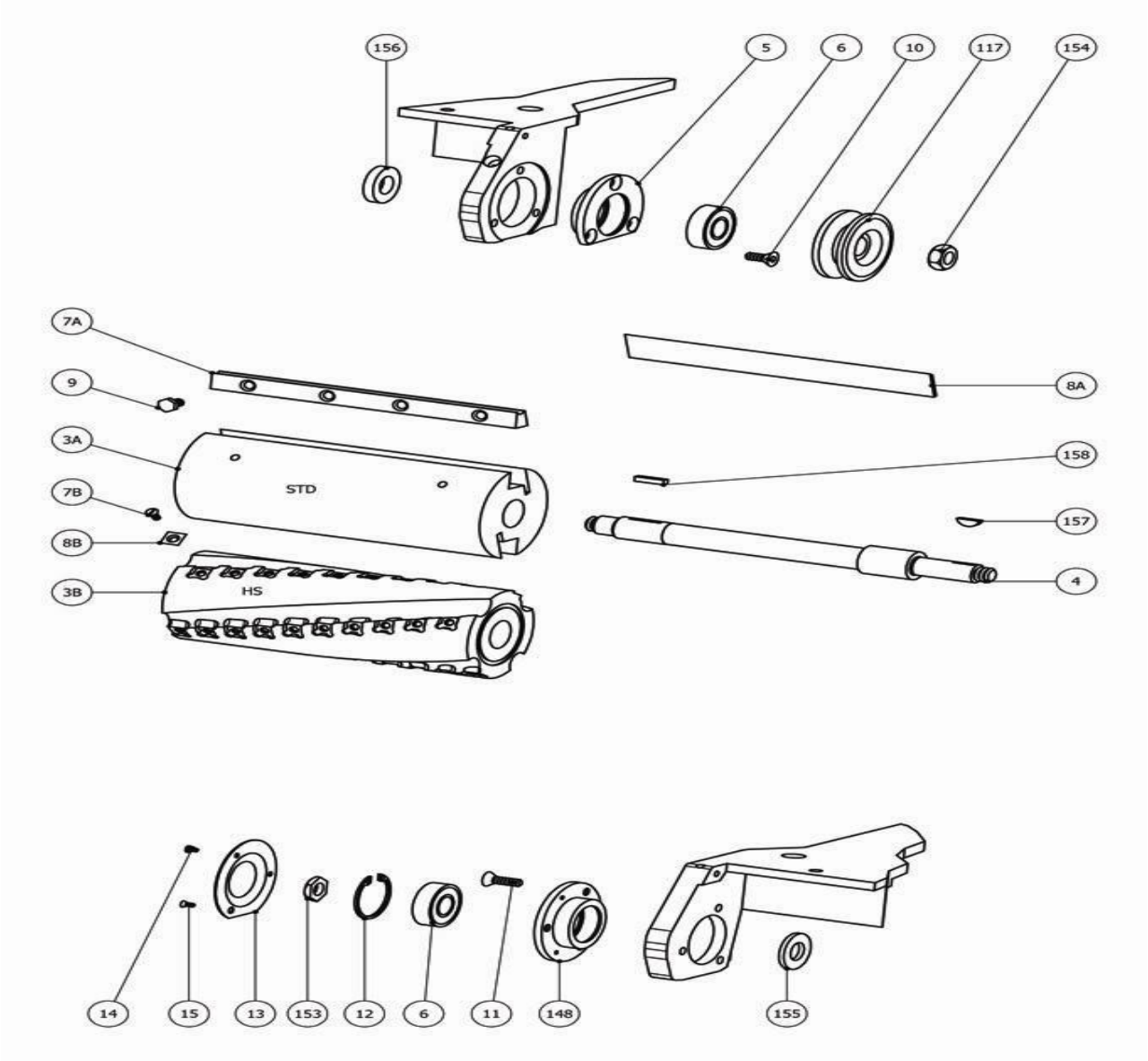

Örebro Cutter GH 10 Previous Models AMO160000.0 Cutter drum

.	ASO162020	Cutter compl. Std
003 .	ASO162003	Cutter std.
004 .	ASO162004	Cutter shaft
005 .	ASO162022	Bearing housing left
006 .	ASO916204	Ball bearing 6204-2RSH
007 .	ASO162059	Steel holder
008 .	ASO949350	Cutting steel L=250
009 .	ASO951515	Screw M6S M8x15 fzb
010 .	ASO953518	Screw MF6S M8X20
011 .	ASO953516	Screw MF6S M8X16
012 .	ASO931047	Circlip ring SGH47
013 .	ASO162024.3	Bearing bush grey
014 .	ASO950211	Screw MCS M4x6 fzb
015 .	ASO954211	Screw MFS M4X6 fzb
117 .	ASO162018.3	V-belt pulley cutter black
148 .	ASO162127	Bearing housing right
153 .	ASO162118	Nut right
154 .	ASO162114	Nut left
155 .	ASO162116	Spacer L=3
156 .	ASO162117	Spacer L=8
157 .	ASO953519	Screw MF6S M8X25
158 .	ASO932625	Key 6x6x25