Örebro Cutter GH 10 Previous Models AMO160000.0 Cutter handle

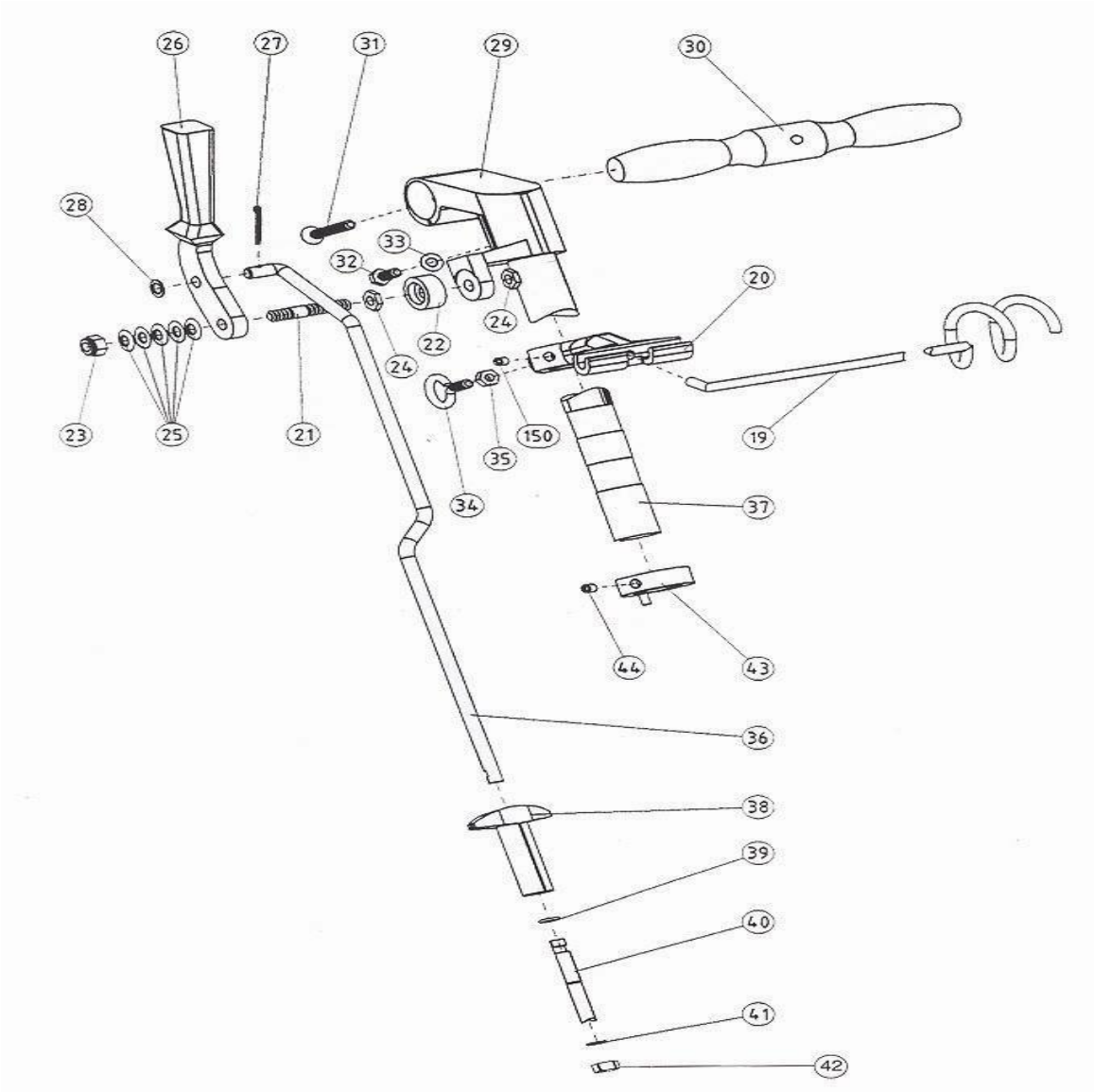

.	ASO116510	Tube sleeve complete
.	ASO116516	Locking piece for rods compl.
.	ASO166000.3	main handle complete
019 .	ASO991220	Cable holder
020 .	ASO161221	Cable and belt holder compl.
021 .	ASO116013	Axle
022 .	ASO116014	Spacer sleeve
023 .	ASO961600	Nut Lock-King M10 fzb
024 .	ASO960060	Nut ML6M M10 fzb
025 .	ASO943600	Spring 10,2x20x0,8
026 .	ASO116012	Working pressure handle (old)
027 .	ASO936940	Pin SP 3x20
028 .	ASO968105	Washer 10x16x0,5
029 .	ASO166001	Handle GH-10
030 .	ASO116011	Wooden handle
031 .	ASO953525	Screw MF6S M8X55
032 .	ASO951518	Screw M6S M8x20 fzb
033 .	ASO965500	Washer
034 .	ASO945827	Eye screw 5/16x4
035 .	ASO964050	Nut U6M 5/16 fzb
036 .	ASO166033	Upper connection rod
037 .	ASO166034	Pusher tube
038 .	ASO116516	Locking piece for rods compl.
039 .	ASO927009	O-ring 9,3x2,4
040 .	ASO118017	Lower connection rod

041 .	ASO930010	Circlip ring SGA10
042 .	ASO960600	Nut M6M M10 fzb
043 .	ASO116010	Tube sleeve
044 .	ASO955512	Screw MSK6SS M8X8
150 .	ASO955512	Screw MSK6SS M8X8