Örebro Cutter GH 10 Previous Models AMO160000.0 Cutter housing

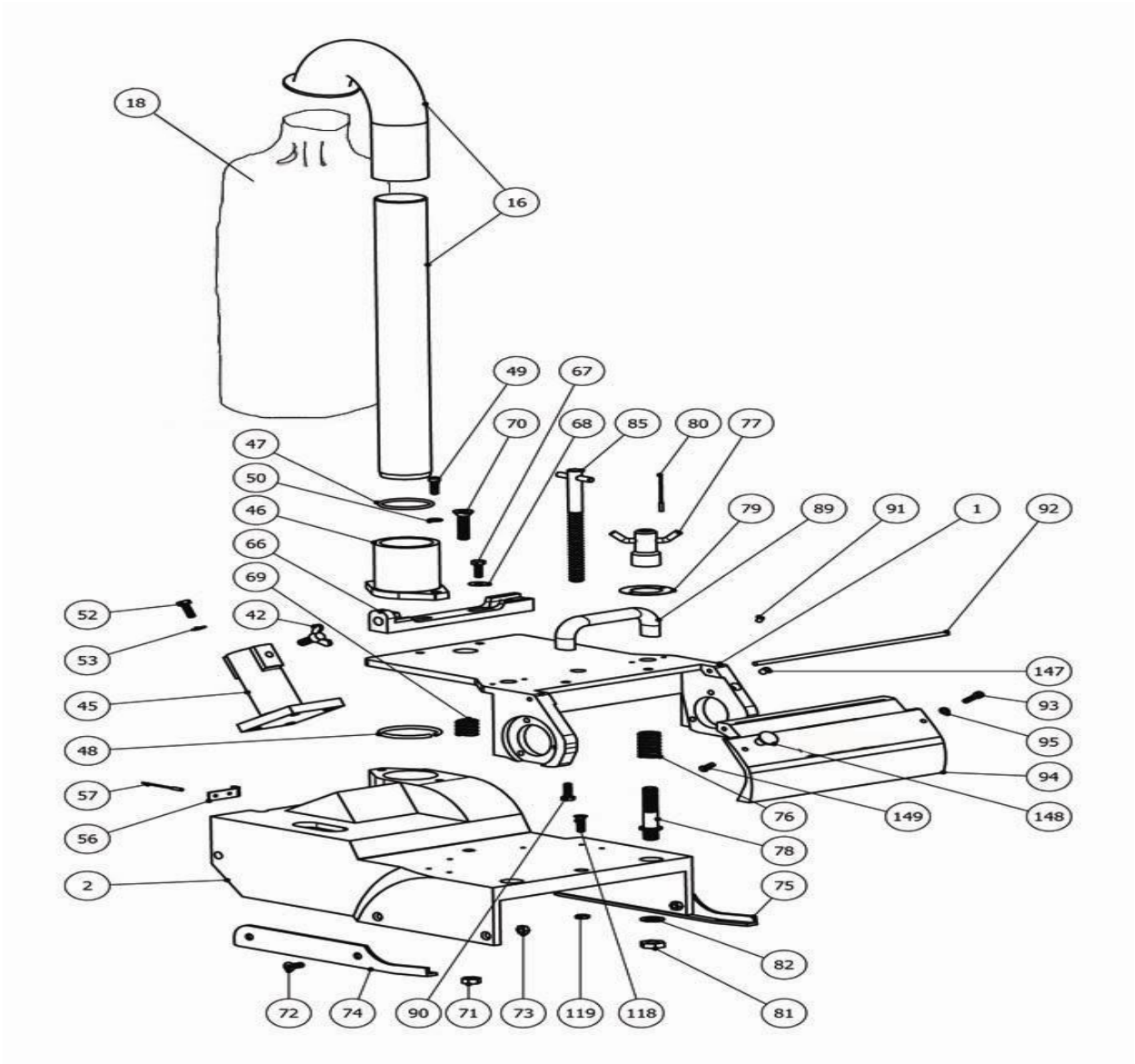

.	ASO111020	Tube holder
.	ASO161500	Protective cover complete
001 .	ASO161001	Cutter chassis
002 .	ASO161002	Machine Chassis
016 .	ASO116600	Dust tube
018 .	ASO991001	Dust bag with zipper
042 .	ASO958620	Wingheaded screw M10x30
045 .	ASO111021	Handle bracket
046 .	ASO111018	Tube holder
047 .	ASO927057	O-ring 57,15x3,5
048 .	ASO928061	Rubber string 6x200 (cut)
052 .	ASO950519	Screw MCS M8x25 fzb
053 .	ASO965500	Washer
056 .	ASO161027	Locking plate
057 .	ASO937217	Pop rivet 4,8 x 16,7
066 .	ASO111041	Motor bracket, rear
067 .	ASO951519	Screw M6S M8x25 fzb
068 .	ASO947413	Washer 8,4x24x2
069 .	ASO161009	Pressure spring short
070 .	ASO953724	Screw MF6S M12X50
071 .	ASO960070	Nut ML6M M12 fzb
072 .	ASO953518	Screw MF6S M8X20
073 .	ASO960050	Nut ML6M M8 fzb
074 .	ASO161015	Sliding bar (right)
075 .	ASO161016	Sliding bar (left)
076 .	ASO161008	Pressure spring long

077 .	ASO161005	Adjustment screw
078 .	ASO161021	Screw for adjustment screw
079 .	ASO996318	Sign graded red
080 .	ASO937011	Pop rivet alu/alu 2,4x6
081 .	ASO960090	Nut ML6M M16 fzb
082 .	ASO966900	Elastic washer 16,2 X27X 3,5
085 .	ASO115152	Tensioner screw
089 .	ASO945132	Lifting handle motor
090 .	ASO951518	Screw M6S M8x20 fzb
091 .	ASO955411	Screw MSK6SS M6X6
092 .	ASO161017	Pin
093 .	ASO952419	Screw MC6S M6x25 fzb
094 .	ASO961400	Nut Lock-King M6 low fzb
095 .	ASO968002	Spacer DB 6x12,5x0,2
096 .	ASO161023	Protective cover
118 .	ASO954520	Screw MFS M8X30 fzb
119 .	ASO960050	Nut ML6M M8 fzb
147 .	ASO947413	Washer 8,4x24x2
148 .	ASO945562	Knob LNII GB25-M6 GH-10
149 .	ASO954416	Screw MFS M8x16