Örebro Cutter GH 10 Previous Models AMO160000.0 Cutter rear wheel

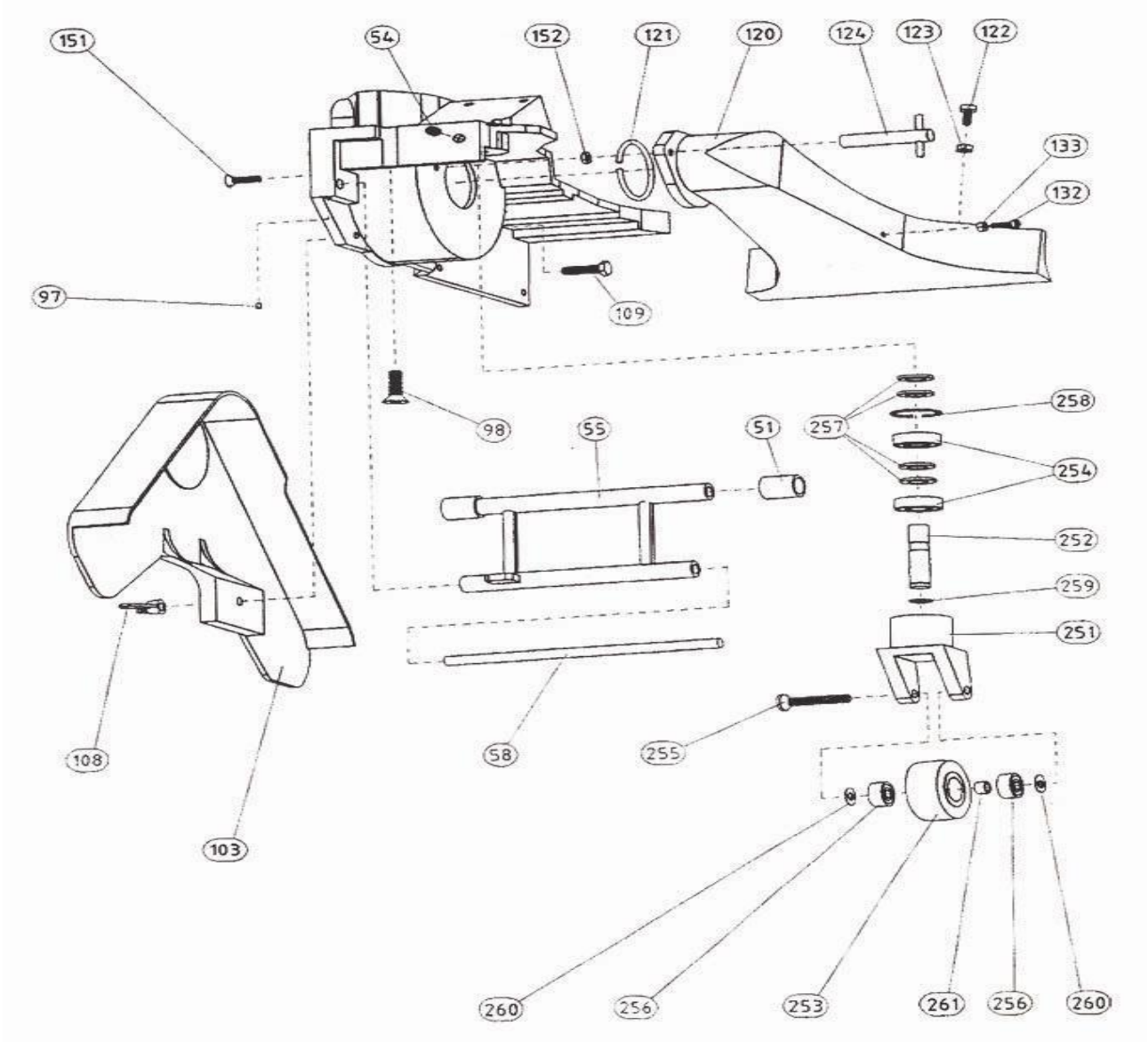

.	ASO161552.3	Intake duct grey complete
.	ASO167500	Rear wheel complete
.	ASO167600	Wheel complete
051 .	ASO929051	Rubber cap dia 26x3,5
054 .	ASO955614	Screw MSK6SS M10X12
055 .	ASO161511	Tilt support incl. Rubber caps
058 .	ASO161028	Axle tilt support
097 .	ASO955412	Screw MSK6SS M6x8
098 .	ASO953724	Screw MF6S M12X50
103 .	ASO161053	Belt cover
108 .	ASO962006	Wing nut MVM M10
109 .	ASO951622	Screw M6S M10x40 fzb
120 .	ASO161052.3	Intake duct grey
121 .	ASO111088	Sealing intake duct 66x88
122 .	ASO951518	Screw M6S M8x20 fzb
123 .	ASO960500	Nut M6M M8 fzb
124 .	ASO161050	Wing nut M8 for intake duct
132 .	ASO950419	Screw MCS M6x25 fzb
133 .	ASO960400	Nut M6M M6 fzb
151 .	ASO954520	Screw MFS M8X30 fzb
152 .	ASO960050	Nut ML6M M8 fzb
251 .	ASO167128.3	Rear wheel bracket compl. grey
252 .	ASO167129	Rear wheel axle
253 .	ASO117600	Wheel compl
254 .	ASO916203	Ball bearing 6203-2RSH
255 .	ASO953626	Screw MF6S M10x60
256 .	ASO916200	Ball bearing 6200-2RSH/C3
257 .	ASO965900	Washer BRB17X30X3 FZB

258 .	ASO931040	Circlip ring SGH40
259 .	ASO930017	Circlip ring SGA17
260 .	ASO965600	Washer BRB 10,5X22X2 FZB
261 .	ASO934016	Spacer 15x10,2x6,5