Örebro Cutter GH 10 Previous Models AMO160000.0 Cutter wheel subframe

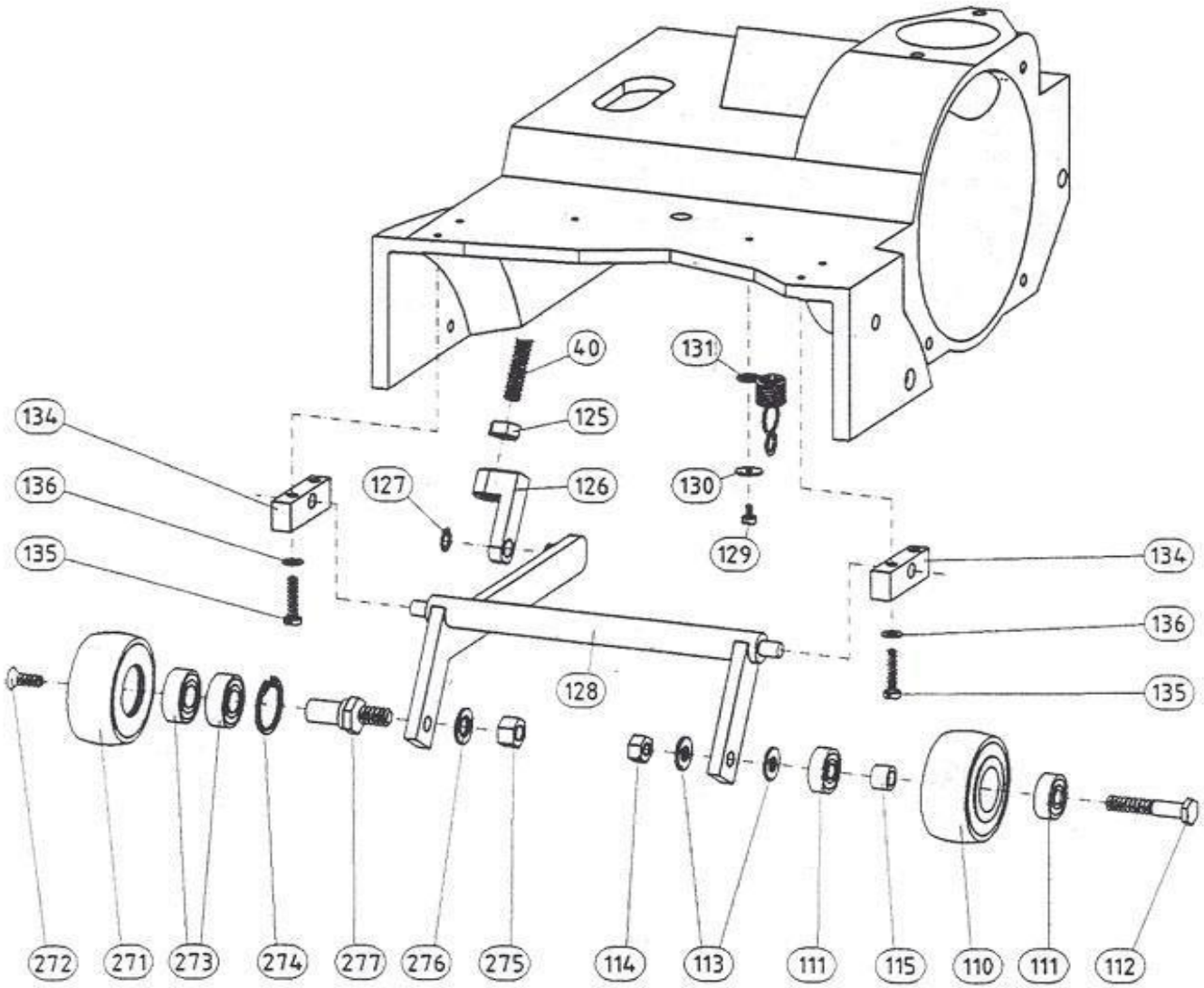

.	ASO168800	Wheel right complete
.	ASO168850	Wheel compl. With excenter
040 .	ASO118017	Lower connection rod
110 .	ASO117600	Wheel compl
111 .	ASO916200	Ball bearing 6200-2RSH/C3
112 .	ASO951624	Screw M6S M10x50 fzb
113 .	ASO965600	Washer BRB 10,5X22X2 FZB
114 .	ASO960600	Nut M6M M10 fzb
115 .	ASO934015	Spacer 15x10,2x12
125 .	ASO960600	Nut M6M M10 fzb
127 .	ASO930012	Circlip ring SGA12
128 .	ASO168014	Wheel sub-frame
129 .	ASO950416	Screw MCS M6x16 fzb
130 .	ASO968002	Spacer DB 6x12,5x0,2
131 .	ASO111066	Spring
134 .	ASO168007	Cradle bracket
135 .	ASO950420	Screw MCS M6x30 fzb
136 .	ASO968002	Spacer DB 6x12,5x0,2
271 .	ASO168123	Wheel
272 .	ASO953516	Screw MF6S M8X16
273 .	ASO916202	Ball bearing 6202-2RSH/C3
274 .	ASO931035	Circlip ring sgh35
275 .	ASO960700	Nut M6M M12 fzb
276 .	ASO965700	Washer BRB 13X24X2 fzb
277 .	ASO168121	Excenter