Örebro Cutter GH 10 Previous Models AMO160007.0 Cutter Motor 1-ph

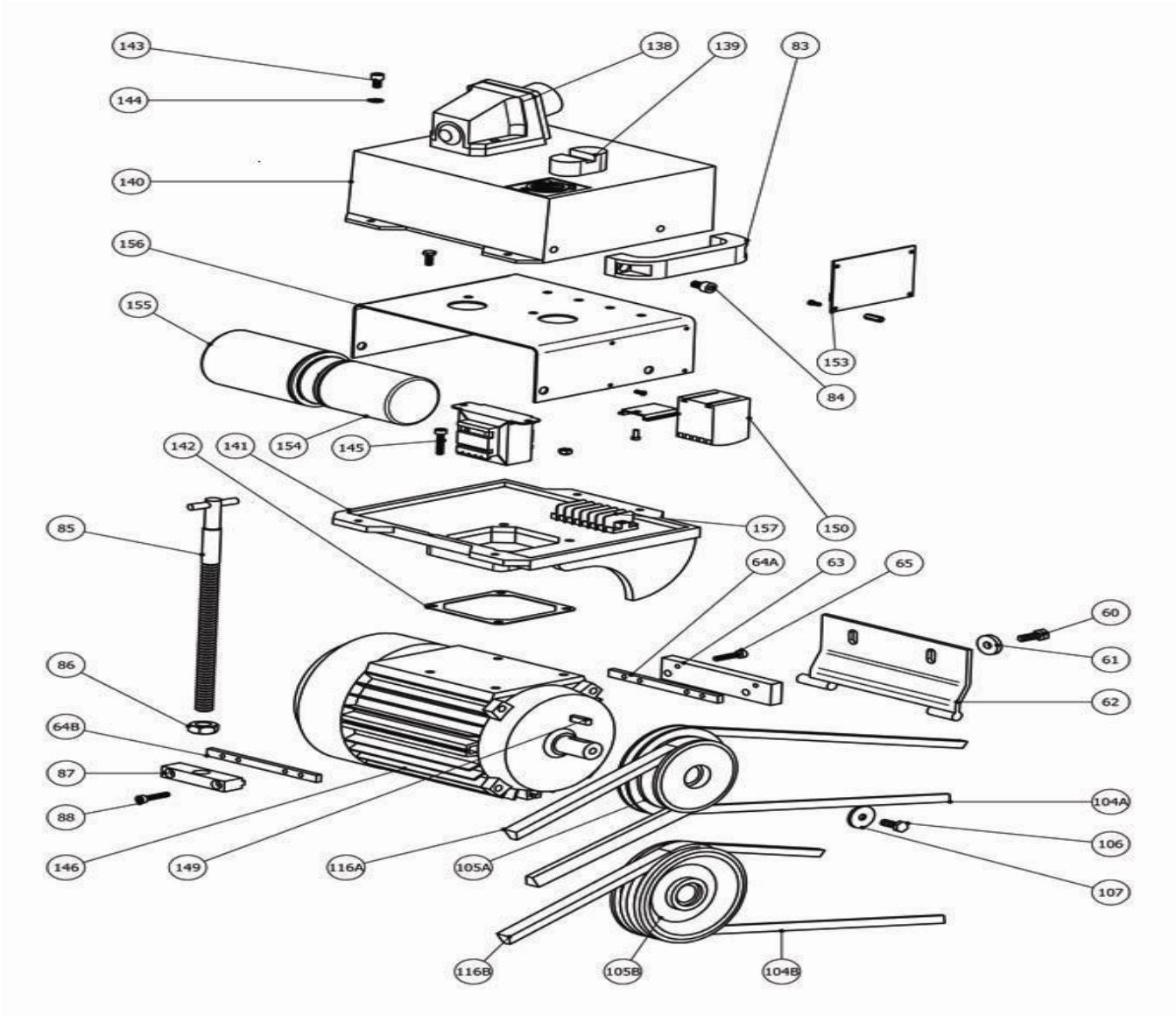

.	ASO115810	Motor and cap.box 1-ph compl.
.	ASO165810	MOTOR, KOND.LÅDA 1F. KOMPL STD
.	ASO165822	Motor cap.box 1-ph 2,2 kW
060 .	ASO951519	Screw M6S M8x25 fzb
061 .	ASO965003	Washer 8,2 X 26 X 5 fzb
062 .	ASO165013	Motor bracket rear
063 .	ASO115163	Intermediate plate
064 .	ASO165169	Mounting plate, front
065 .	ASO952416	Screw MC6S M6x16 fzb
083 .	ASO945132	Lifting handle motor
084 .	ASO952515	Screw MC6S M8x14 fzb
085 .	ASO165085	Tensioner screw
086 .	ASO960900	Nut M6M M16 fzb
087 .	ASO115164	Front motor bracket
088 .	ASO952420	Screw MC6S M6x30 fzb
104 .	ASO923800	V-belt HS SPZ 800 for cutter
105 .	ASO165020.3	V-belt pulley motor dia 132 mm
106 .	ASO951518	Screw M6S M8x20 fzb
107 .	ASO965001	Washer 8,5 X 30 X 4 fzb
116 .	ASO921300	V-belt cutter HS B-30
138 .	ASO903216	Motor inlet 1-phase 3-pol
139 .	ASO903752	Switch compl.with the lamp
140 .	ASO115147	Cap.box cover
141 .	ASO115148.3	Base plate grey
142 .	ASO115242	Rubber insert

143 .	ASO952413	Screw MC6S M6x10 fzb
144 .	ASO968002	Spacer DB 6x12,5x0,2
145 .	ASO950421	Screw MCS M6x35 fzb
146 .	ASO900220	Motor with soft start
149 .	ASO932820	Key 8x7x20
150 .	ASO903750	Contactor 5,5 kW 100-M12N
151 .	ASO903754	Transformer
153 .	ASO903755	Circuit card univ. 1-1/3 phase
154 .	ASO903102	Start condensator 100 uF
155 .	ASO903140	Condensator cont.use 140 uF
156 .	ASO115256	Mounting plate for capacitor b
157 .	ASO906032	Plinth