Örebro Cutter GH 10 Previous Models AMO160007.0 Cutter ventilator

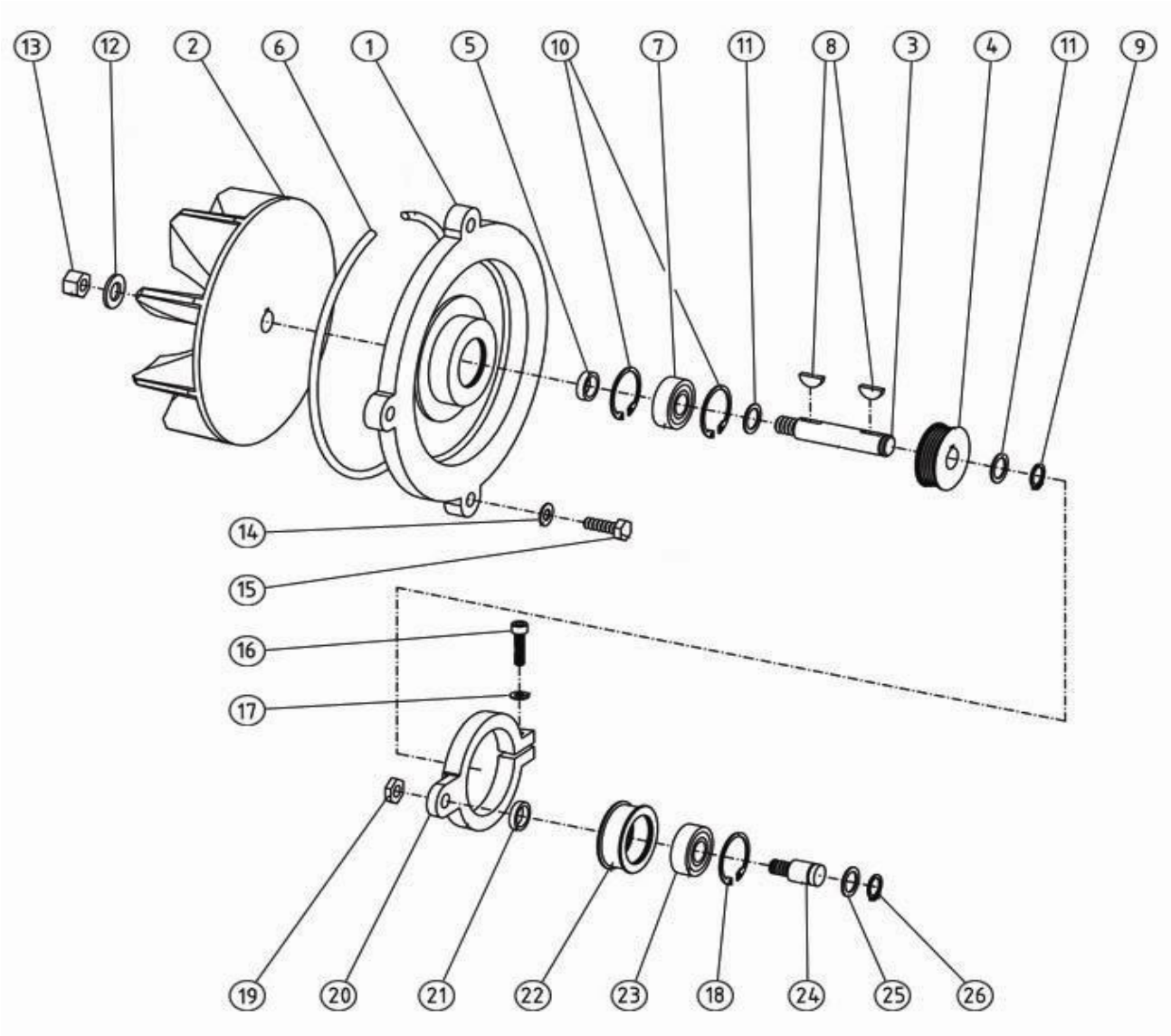

.	ASO114500	Bearing housing compl.
.	ASO114600	V-belt tighter compl.
01 .	ASO114001	Bearing housing
02 .	ASO114002	Ventilator wheel
03 .	ASO114003	Axle
04 .	ASO114004	Pulley
05 .	ASO934009	Spacer 20x15,2x5
06 .	ASO928062	Rubber string 6x600 (cut)
07 .	ASO913202	Ball bearing SKF3202 2RS1
08 .	ASO933416	Woodruf key WK 4x16
09 .	ASO930015	Circlip ring SGA15
10 .	ASO931035	Circlip ring sgh35
11 .	ASO968310	Spacer 15x21x1
12 .	ASO965700	Washer BRB 13X24X2 fzb
13 .	ASO960700	Nut M6M M12 fzb
14 .	ASO965500.3	Washer BRB 8,4x16x1,5 black
15 .	ASO951519.3	Screw M6S M8x25 black
16 .	ASO952419	Screw MC6S M6x25 fzb
17 .	ASO968002	Spacer DB 6x12,5x0,2
18 .	ASO930015	Circlip ring SGA15
19 .	ASO960060	Nut ML6M M10 fzb
20 .	ASO114101.3	Tensioner roller bracket grey
21 .	ASO934010	Spacer 20x15,2x4
22 .	ASO114102	Wheel tensioner bracket
23 .	ASO916202	Ball bearing 6202-2RSH/C3

24 .	ASO114103	Axle 15x32
25 .	ASO968310	Spacer 15x21x1
26 .	ASO930015	Circlip ring SGA15