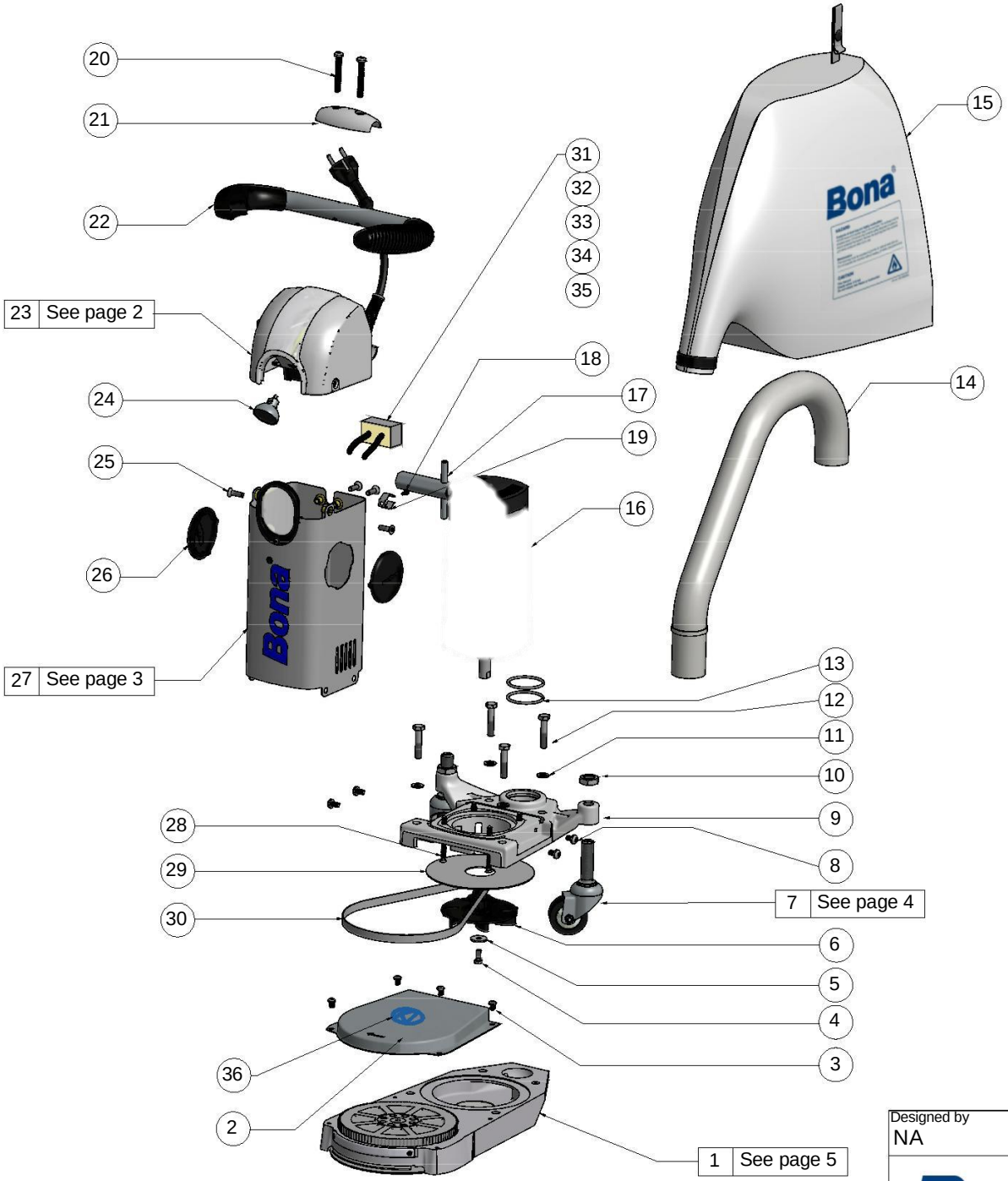

Parts List			
ITEM	QTY	DESCRIPTION	PART Number
1	1	Complete arm BE 220mm assembly	ASO232500.3
2	1	Long arm cover	ASO232048
3	4	Screw Torx MRT M5x8 DIN7985 galvanized	ASO957811
4	1	Screw hexagonal head M6x14H galvanized	ASO951415
5	1	Washer n20xn6,5x3	ASK5100030247
6	1	Complete fan Bona Edge 220mm	ASO231014
7	2	Complete w heel 50mm	ASO231700
8	4	Screw Torx MRT M6x10 T30 DIN7985 galvanized	ASO957821
9	1	Motor machined grey support BE 220	ASO231112.3
10	2	Low nut M16 H.8 galvanized	ASO960090
11	4	Washer n8,4xn16x1,6	ASK5802230004
12	4	Screw M8x40 half threaded	ASO951522
13	2	O-Ring 44,2x3	ASO927044
14	1	Bona Edge suction pipe	ASO231003.3
15	1	Dust bag Edge EU	ASO992003
16	1	Motor 2kW 220V/50Hz	ASO900300
17	1	Box spanner 17mm (included into tool bag)	ASO990717
18	1	Flanged Torx screw M3,5x10	ASO958105
19	1	Clips WHA 19-24 galvanized	ASO945563
20	2	Screw Torx MRT M6x50 T30 DIN7985 galvanized	ASO957830
21	1	BE handle fixing little block	ASO231058
22	1	Complete handle Bona Edge	ASO231057
23	1	Complete cap 230V Bona Edge	ASO231552.3
24	1	Halogen lamp MR11 ALU 12V 20W	ASO901503
25	4	Screw MFT-Torx T30 M6x20 galvanized	ASO958352
26	2	Side guard black cover BE '05	ASO231056
27	1	Complete motor drilled cover for filter Bona Edge	2399940055
28	4	Screw MPX-Z M5x65 fzx	ASO958065
29	1	Lock disc	ASO231013
30	1	Long Bona Edge cogged belt	ASO924690
31	1	Anti-Jamming filter	2300030070
32	2	Screw M4x10 UNI7687 galvanized	5800230402
33	2	Self- locking nut M4 DIN982 galvanized	5801933004
34	2	Washer Ø4 galvanized	5802230001
35	1	Strain rilief	6600030031
36	1	KT round label Ø55	5100031286

Parts, not show n

1	Tool bag Bona Edge complete	ASO991135
1	Cable ext. 7m w ith Schuko plug/socket	2900030115
1	Face mask - hear cap compl.	ASO991232
1	Abrasive disc 8300 antistatic Ø178mm Grit 80	AAS467400806

Designed by	Checked by	Approved by - date	Date
NA	KT Technical Department	KT Technical Department - May 2016	May 2016

Bona® KÜNZLE & TASIN

Description
Bona Edge 220mm 2kW 230V-50/60Hz

Drawing n°	Edition	Page
AMO230009.3	'16	1 / 5

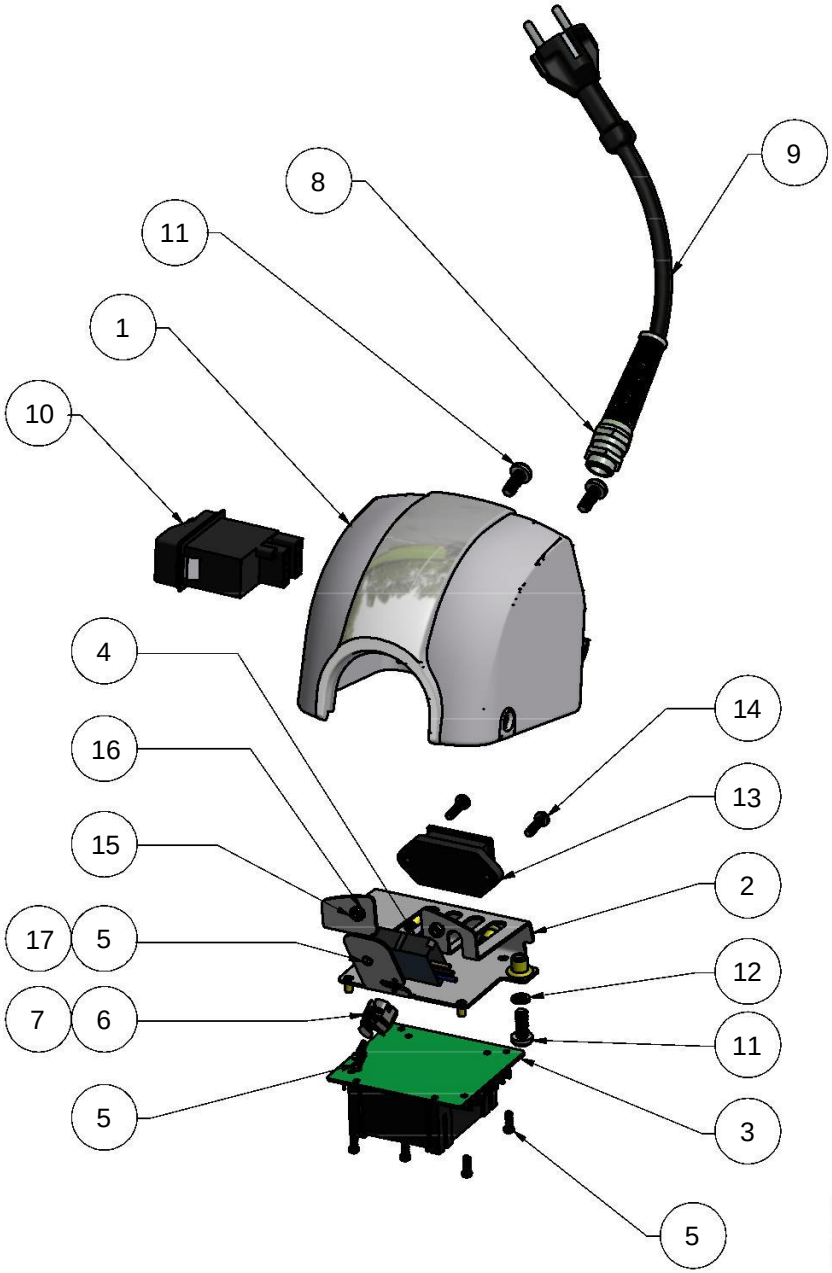

ASO231552.3 - Complete cap 230V Bona Edge

Parts List

ITEM	QTY	DESCRIPTION	PART Number
1	1	Grey cap Bona Edge	ASO231052.3
2	1	Bracket for circuit card BE	ASO231059
3	1	Printed circuit board 230V Bona Edge	ASO231060
4	1	Complete soft start 230V	ASO233879
5	7	Screw Torx M3x10 DIN7985 galvanized	ASO957804
6	1	Lamp holder G4 with connector	ASO901511
7	1	Spring for lamp support	ASO901502
8	1	Metal cable gland M16x1.5	ASO901518
9	1	Black cable + schuko socket 3x1.5	ASO903880
10	1	Complete switch BE 12A 230V/50Hz	ASO233876
11	3	Screw Torx MRT M6x16 T30 DIN7985 galvanized	ASO957823
12	1	Spring washer n6 1751 galvanized	5802231002
13	1	Hour meter	ASO903888
14	2	Screw Torx MRT M4x16 DIN7985 galvanized	ASO957809
15	2	Nut M4 hexagonal UNI5588 galvanized	5801930004
16	2	Lock washer 4 6798/J inn. galvanized	5802233003
17	1	Nut M3	5801931003

Designed by	Checked by	Approved by - date	Date
NA	KT Technical Department	KT Technical Department - May 2016	May 2016

Bona® KÜNZLE & TASIN

Description: Bona Edge 220mm 2kW 230V-50/60Hz

Drawing n° AMO230009.3 | Edition '16 | Page 2 / 5

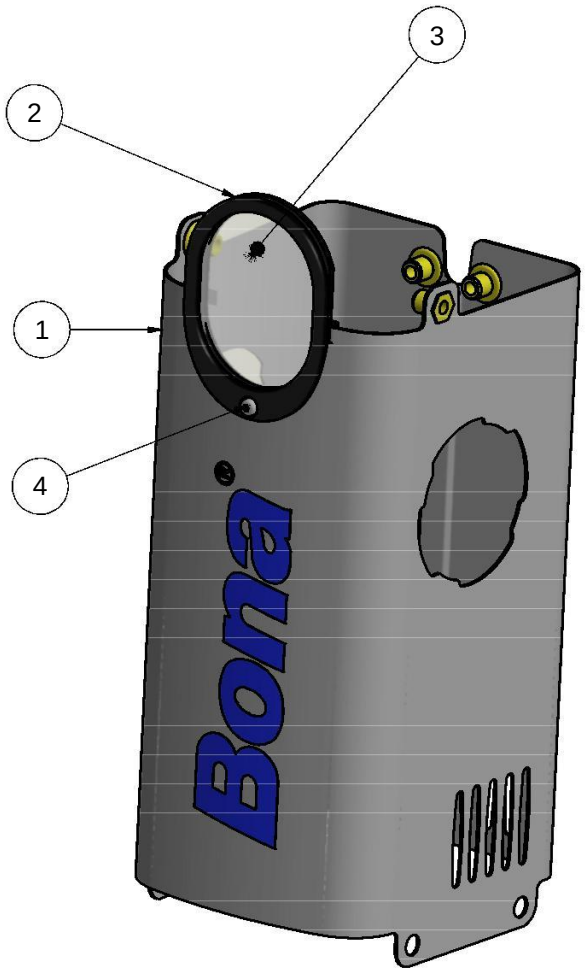

2399940055 - Complete motor drilled cover for filter Bona Edge

PARTS LIST

ITEM	QTY	DESCRIPTION	PART NUMBER
1	1	Motor drilled cover for filter BE	2300040055
2	1	Rubber gasket for glass	ASO261017
3	1	Lamp glass	ASO261007
4	1	Flanged Torx screw M3.5x10	ASO958105

Designed by	Checked by	Approved by - date	Date
NA	KT Technical Department	KT Technical Department - May 2016	May 2016

Bona® KÜNZLE & TASIN

Description: Bona Edge 220mm 2kW 230V-50/60Hz

Drawing n°: AMO230009.3 | Edition: '16 | Page: 3 /5

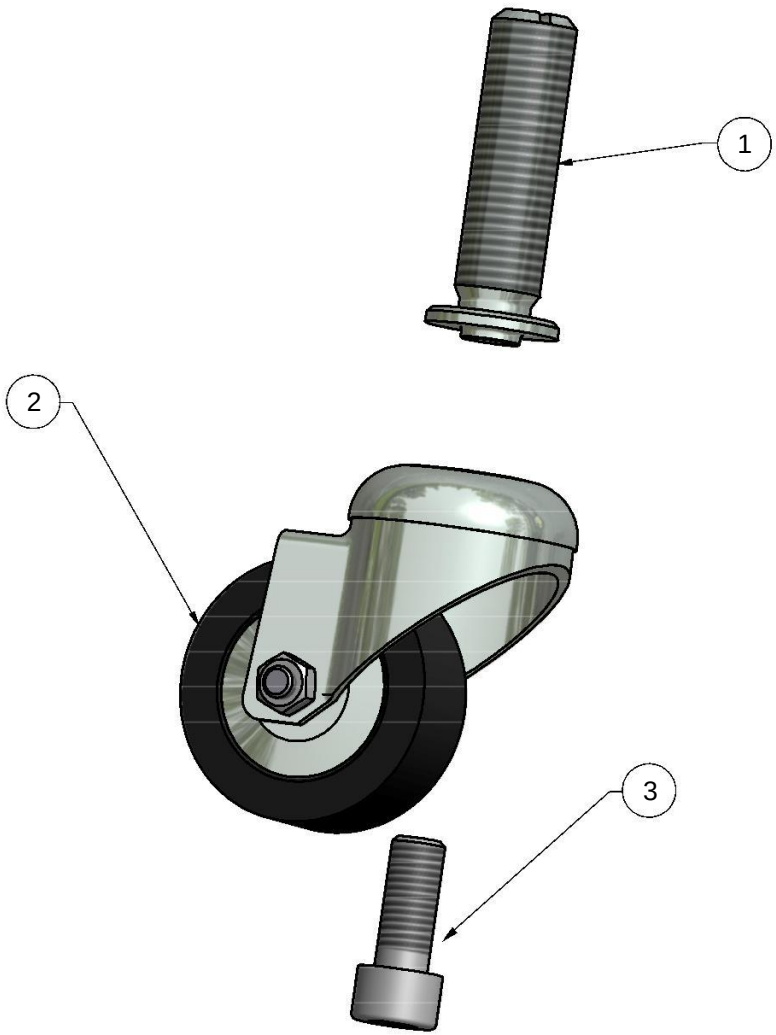

ASO231700 - Complete wheel 50 mm

PARTS LIST

ITEM	QTY	DESCRIPTION	PART NUMBER
1	1	Wheel pin M16x60xM10	ASO231037
2	1	Complete Polyurethane w heel 50mm	ASO945350
3	1	Screw M10x25 DIN912 galvanized	ASO952619

Designed by	Checked by	Approved by - date	Date
NA	KT Technical Department	KT Technical Department - May 2016	May 2016

Bona® KÜNZLE & TASIN

Description: Bona Edge 220mm 2kW 230V-50/60Hz

Drawing n°: AMO230009.3 | Edition: '16 | Page: 4 / 5

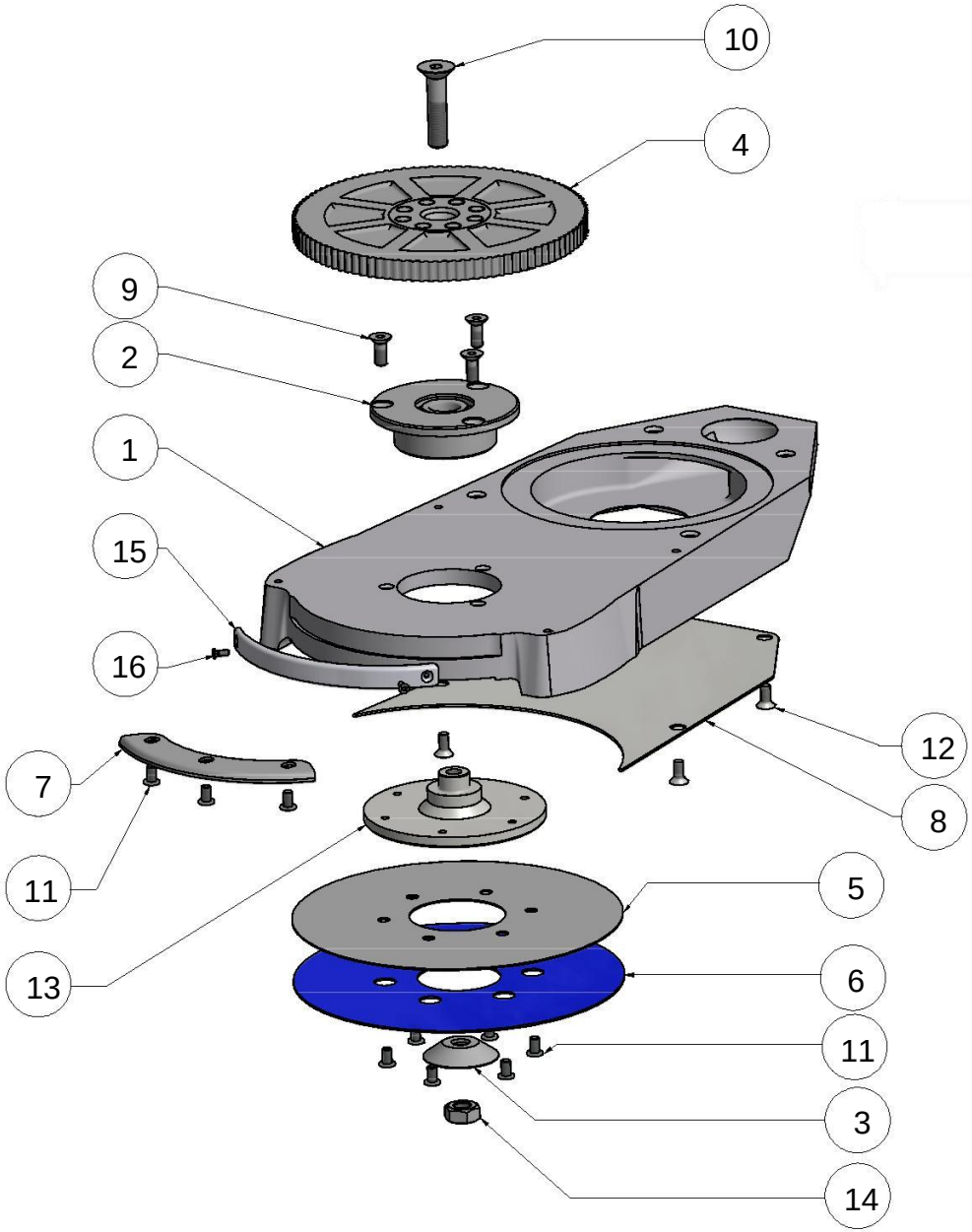

ASO232500.3 - Complete arm BE 220mm assembly

PARTS LIST

ITEM	QTY	DESCRIPTION	PART NUMBER
1	1	Machined grey arm Bona Edge 220	ASO232001.3
2	1	Bearings support + bearings	ASO232102
3	1	Conical w asher	ASO222053
4	1	Aluminium pulley z=100	ASO232012
5	1	Steel disc Bona Edge	ASO232008
6	1	Velcro disc n178	ASO222059
7	1	Backing disc guard	ASO222061
8	1	Long BE suction metal sheet	ASO232030
9	3	Screw M6x16H DIN 7991	ASO953416
10	1	Screw hex.sock.count.s-col.M10x45	ASO953623
11	9	Screw Torx M5x8 galvanized	ASO958012
12	4	Screw M5x12H DIN 7991	ASO953314
13	1	Sanding centre	ASO232207
14	1	Nut brass M6M M10	ASO963600
15	1	Wall prptection Bona Edge L=145	ASO232006.3
16	2	Screw Torx countersunk head M3x8	ASO958120

Designed by	Checked by	Approved by - date	Date
NA	KT Technical Department	KT Technical Department - May 2016	May 2016

Bona® KÜNZLE & TASIN

Description: Bona Edge 220mm 2kW 230V-50/60Hz

Drawing n°: AMO230009.3 | Edition: '16 | Page: 5 /5